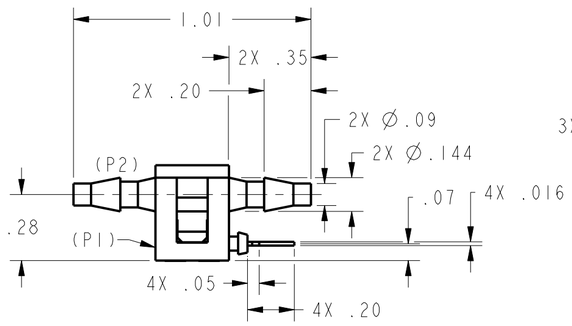

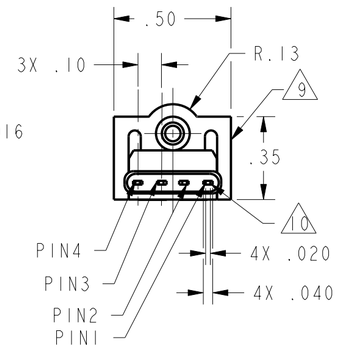

TERMINATION (5)

CATALOG LISTING	LASER BRAND 9
26PCCFG5G39	6CF5G39
26PCDFG5G39	6DF5G39

26PC _FG _G39

- STYLE (**G**) GAGE
- TERMINATION (**5**) WIRE HARNESS
- PORT (**G**) SMALL FLOW THROUGH
- SEAL (**F**) FLUOROSILICONE
- OPERATING PRESSURE (**C**) 15 PSI (**D**) 30 PSI

GENERAL OPERATING CHARACTERISTICS
(ELECTRICAL PERFORMANCE AT 10.00±0.01 VDC EXCITATION, 25°C)

OPERATING PRESSURE RANGE (PSIG)	0-1 (A)			0-5 (B)			0-15 (C)			0-30 (D)			
	MIN	NOM	MAX	MIN	NOM	MAX	MIN	NOM	MAX	MIN	NOM	MAX	UNITS
SPAN (P2>P1) 1	14.7	16.7	18.7	47	50	53	97	100	103	97	100	103	mV
NULL OFFSET	-1.5	0	+1.5	-1.5	0	+1.5	-1.5	0	+1.5	-1.5	0	+1.5	mV
		TYP	MAX		TYP	MAX		TYP	MAX		TYP	MAX	UNITS
LINEARITY (BFSL, P2>P1)		0.25	0.5		0.4	0.5		0.25	0.5		0.1	0.2	%SPAN
NULL SHIFT (0 TO 25°C, 25 TO 50°C) 2		±0.5	±1.0		±0.5	±1.0		±0.5	±1.0		±0.75	±1.5	mV
SPAN SHIFT (0 TO 25°C, 25 TO 50°C) P2>P1 2		±1.0	±2.0		±1.0	±1.5		±0.75	±1.5		±0.75	±1.5	%SPAN
REPEATABILITY AND HYSTERESIS		±0.5			±0.2			±0.2			±0.2		%SPAN
OVERPRESSURE (P2>P1; P1>P2)			20			20			45			60	PSI

ALL PRESSURE RANGE	MIN	TYP	MAX	UNITS
EXCITATION VOLTAGE		10	16	VDC
INPUT RESISTANCE	5.5K	7.5K	11.5K	OHMS
OUTPUT RESISTANCE	1.5K	2.5K	3.0K	OHMS
RESPONSE TIME			1.0	ms

TEMPERATURE RANGES	
STORAGE	-55°C TO +100°C (-67°F TO +212°F)
OPERATE	-40°C TO +85°C (-40°F TO +185°F)
COMPENSATED	0 TO +50°C (+32°F TO +122°F)

CIRCUIT DIAGRAM

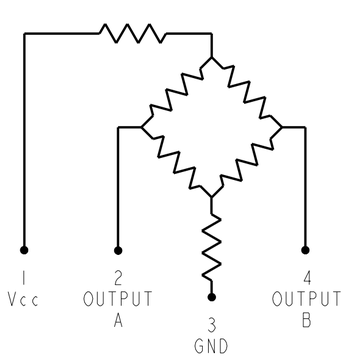

OUTPUT "A" INCREASES AS P2 PRESSURE INCREASES

OUTPUT "B" DECREASES AS P2 PRESSURE INCREASES

METRIC	INCHES
0,40	.016
0,51	.020
0,8	.03
1,02	.040
1,8	.07
2,3	.09
2,5	.10
2,8	.11
3,3	.13
3,66	.144
5,1	.20
6,1	.24
7,1	.28
8,4	.33
8,9	.35
12,7	.50
15,2	.60
25,7	1.01
609,60	24.000

NOTES
1. SPAN IS THE ALGEBRAIC DIFFERENCE BETWEEN OUTPUT AT MAXIMUM RATED OPERATING PRESSURE AND OUTPUT AT 0 PSIG
2. TEMPERATURE ERROR IS CALCULATED WITH RESPECT TO 25°C
3 - INPUT MEDIA LIMITED ONLY TO THOSE MATERIALS THAT WILL NOT ATTACK SILICON, THE HOUSING MATERIAL OR SEAL MATERIAL
4 - PORT AND HOUSING MADE OF AMODEL PLASTIC
5 - SENSOR IS OPERATIONAL OVER VACUUM PRESSURE RANGE
6 - RATIOMETRIC TO SUPPLY VOLTAGE
7 - PRODUCT RELEASED USING AIR ONLY AS MEDIA
8 - THIS UNIT WILL NOT WITHSTAND 100% DMSO
9. CATALOG LISTING AND DATE CODE HERE. ALTERNATE FORMAT OF CATALOG LISTING BRAND IS THE ENTIRE CATALOG LISTING
10. TERMINAL 1 LOCATION
11 - WIRE HARNESS NOT INCLUDED. IT MUST BE ORDERED SEPARATELY

ANSI Y14.5M-1982 APPLIES

THIRD ANGLE PROJECTION
SCALE 2:1
DO NOT SCALE PRINT
UNLESS OTHERWISE SPECIFIED TOLERANCES ARE

ONE PLACE	(.0)	±.030
TWO PLACES	(.00)	±.015
THREE PLACES	(.000)	±.005
ANGLES		±

WEIGHT

THIS DRAWING COVERS A PROPRIETARY ITEM AND IS THE PROPERTY OF MICRO SWITCH. A DIVISION OF HONEYWELL. THIS DRAWING IS NOT TO BE COPIED OR USED WITHOUT THE APPROVAL OF MICRO SWITCH.

MICRO SWITCH a Honeywell Division
FED. MFG. CODE 91929

BRIDGE PRESSURE SENSOR

CATALOG LISTING
26PC SERIES CHART 14

26PC SERIES CHART 14 | REPLACES - | PAGE 1 OF 1 | RELEASE NO. PR-24149 | DRAWING NUMBER 6 | ISSUE

REVISIONS				
A	C096093	TSM 13MAR00	28JUN05	AK
B	204006	TSM 24SEP01		
C	204714	GLH 16JAN02		
D	204828	TRF 04FEB02		
E	0013886	CMH 28JUN05		

CHECK	13 DEC 99	JAF	13 DEC 99
DRAWN	LJK	PTC/CAD 3D	