RAD-TOLERANT CLASS-V, CURRENT-MODE PWM CONTROLLER

Check for Samples: UC1846-SP

FEATURES

- **QML-V Qualified, SMD 5962-86806**
- **Rad-Tolerant: 30 kRad (Si) TID** (1)
- **Automatic Feed-Forward Compensation**
- **Programmable Pulse-by-Pulse Current Limiting**
- **Automatic Symmetry Correction in Push-Pull Configuration**
- **Enhanced Load Response Characteristics**
- **Parallel-Operation Capability for Modular Power Systems**
- **Differential Current-Sense Amplifier With Wide Common-Mode Range**
- **Double-Pulse Suppression**
- **500-mA (Peak) Totem-pole Outputs**
- **±1% Bandgap Reference**
- **Undervoltage Lockout**
- **Soft-Start Capability**
- **Shutdown Terminal**
- **500-kHz Operation**

(1) Radiation tolerance is a typical value based upon initial device qualification with dose rate = 10 mrad/sec. Radiation Lot Acceptance Testing is available - contact factory for details.

FK PACKAGE (TOP VIEW)

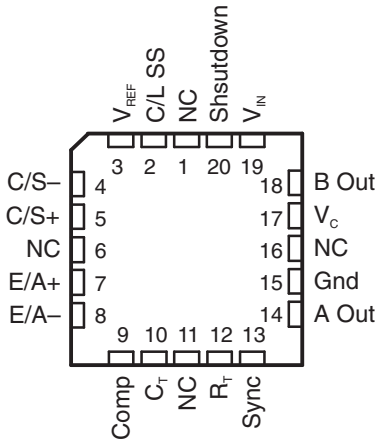

J OR W PACKAGE (TOP VIEW)

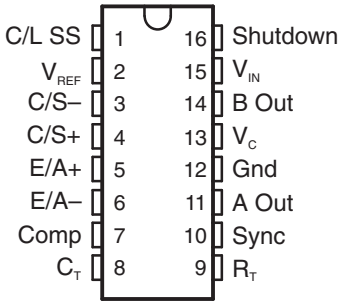

DESCRIPTION

The UC1846 control devices provide all of the necessary features to implement fixed frequency, current mode control schemes while maintaining a minimum external parts count. The superior performance of this technique can be measured in improved line regulation, enhanced load response characteristics, and a simpler, easier-to-design control loop. Topological advantages include inherent pulse-by-pulse current limiting capability, automatic symmetry correction for push-pull converters, and the ability to parallel “power modules" while maintaining equal current sharing.

Protection circuitry includes built-in under-voltage lockout and programmable current limit in addition to soft start capability. A shutdown function is also available which can initiate either a complete shutdown with automatic restart or latch the supply off.

Other features include fully latched operation, double-pulse suppression, deadline adjust capability, a ±1% trimmed bandgap reference, and low outputs in the OFF state.

ORDERING INFORMATION(1)

T_A	PACKAGE	ORDERABLE PART NUMBER	TOP-SIDE MARKING
–55°C to 125°C	CDIP – J	5962-8680603VEA	UC1846J-SP
	CFP - W	5962-8680603VFA	UC1846W-SP
	LCCC – FK	5962-8680603V2A	UC1846FK-SP

(1) For the most current package and ordering information, see the Package Option Addendum at the end of this document, or see the TI web site at www.ti.com.

BLOCK DIAGRAM

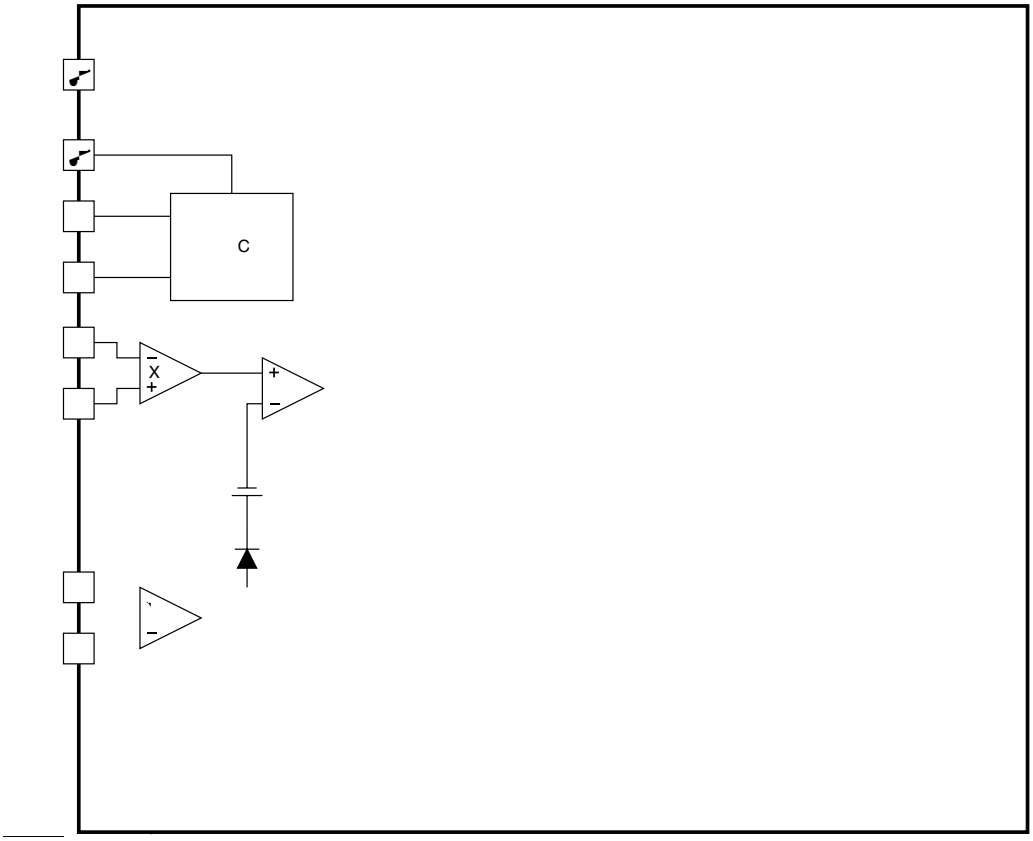

NOTE: Pin numbers shown are for the J package.

APPLICATION INFORMATION

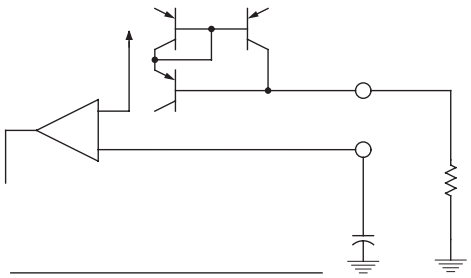

Figure 1. Oscillator Circuit

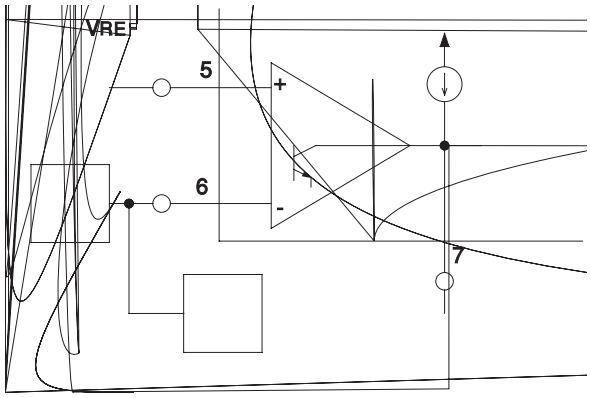

Figure 2. Error Amplifier Output Configuration

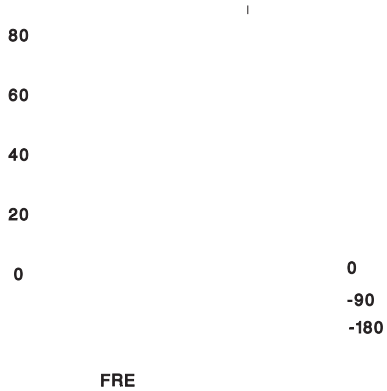

Figure 3. Error Amplifier Gain and Phase vs Frequency

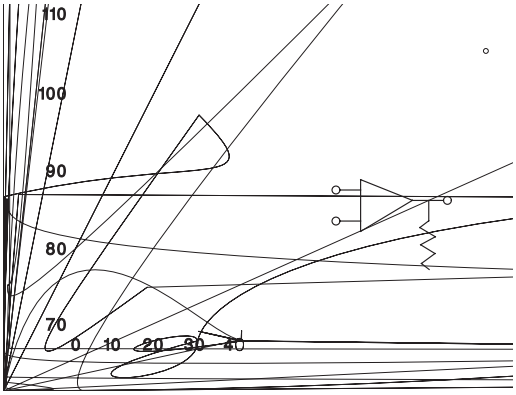

Figure 4. Error Amplifier Open-Logic Gain vs Load Resistance

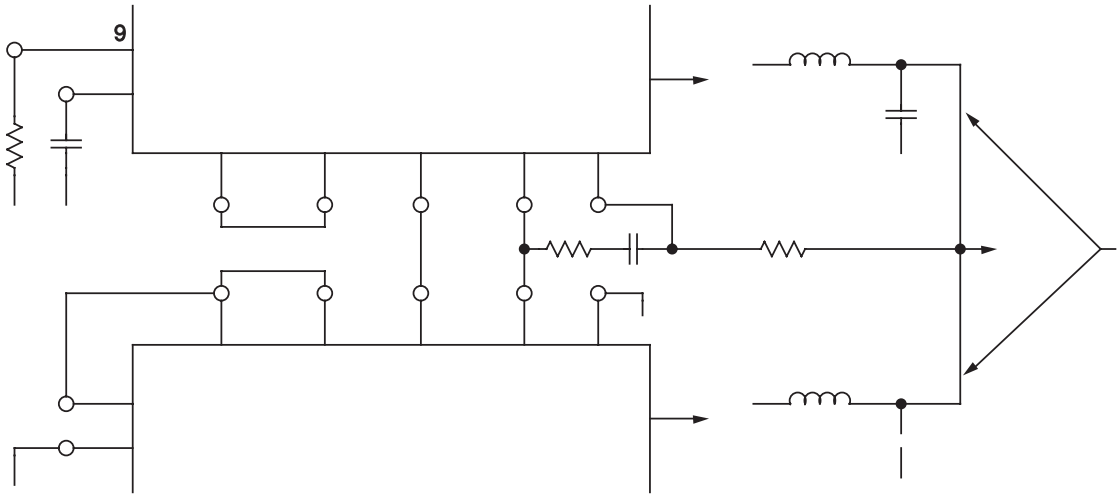

Figure 5. Parallel Operation

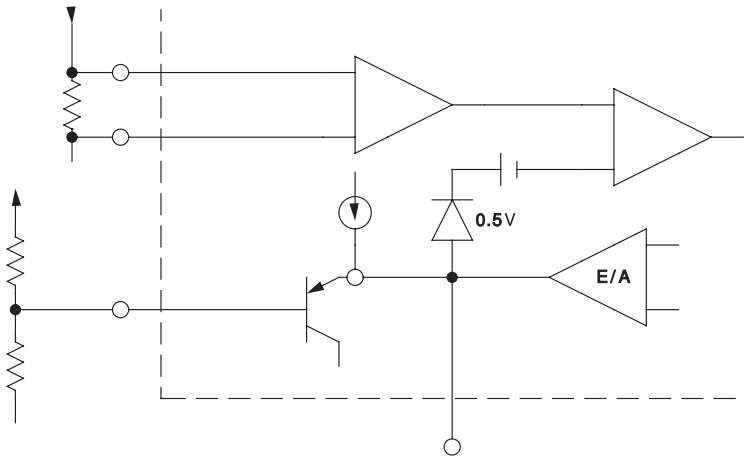

Figure 6. Pulse-by-Pulse Current Limiting

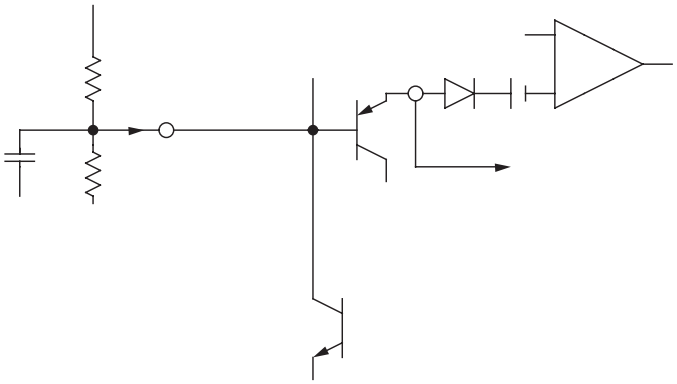

Figure 7. Soft-Start and Shutdown/Restart Functions

Figure 8. Current-Sense Amplifier Connection

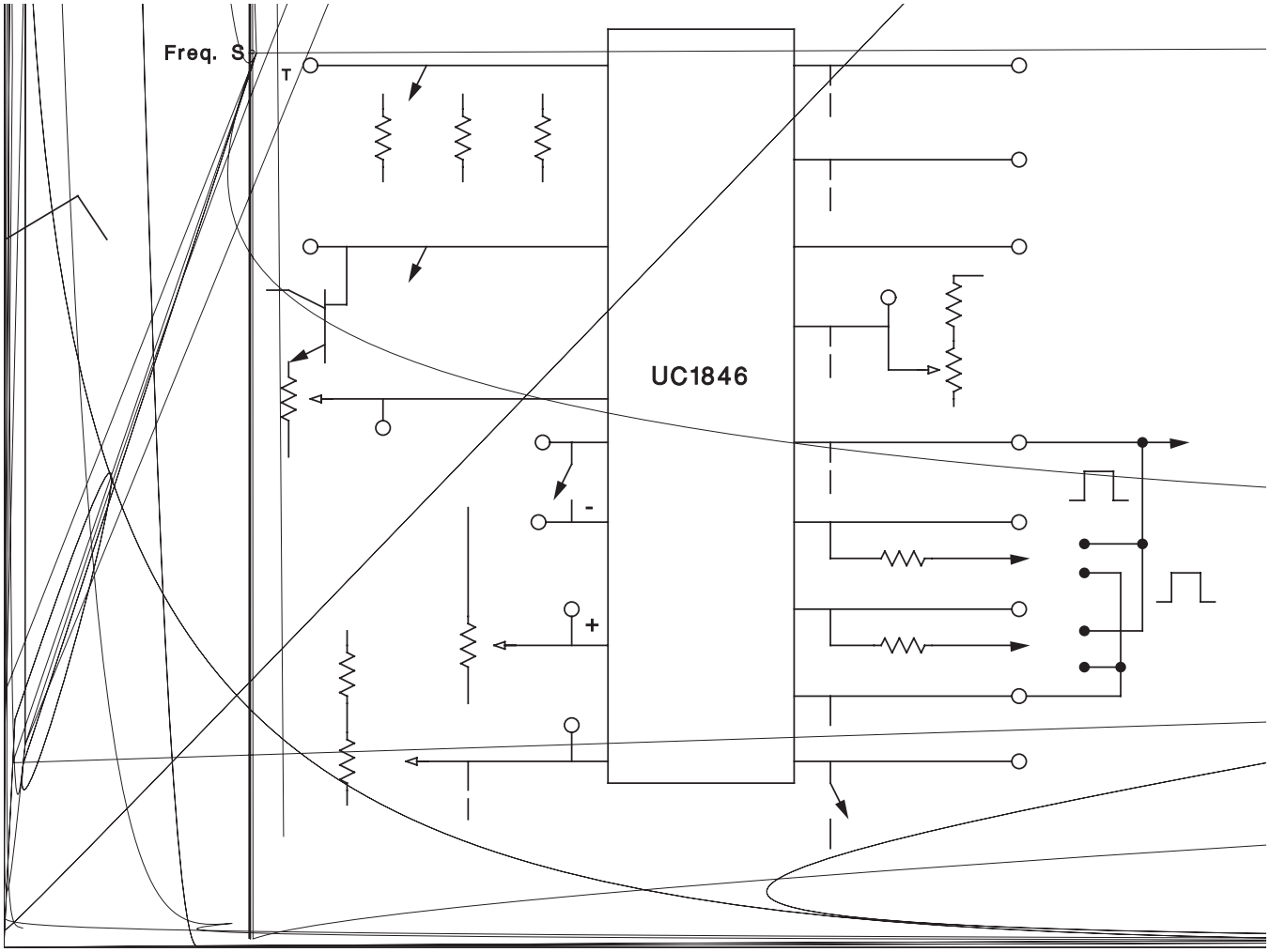

Figure 9. Open-Loop Test Circuit

PACKAGING INFORMATION

Orderable Device	Status (1)	Package Type	Package Drawing	Pins	Package Qty	Eco Plan (2)	Lead/ Ball Finish	MSL Peak Temp (3)	Samples (Requires Login)
5962-8680601V2A	ACTIVE	LCCC	FK	20	1	TBD	POST-PLATE	N / A for Pkg Type	
5962-8680601VEA	ACTIVE	CDIP	J	16	1	TBD	A42	N / A for Pkg Type	5962-8680601VEA

- Enhanced Product: UC1846-EP

NOTE: Qualified Version Definitions:

- Catalog - TI's standard catalog product
- Enhanced Product - Supports Defense, Aerospace and Medical Applications

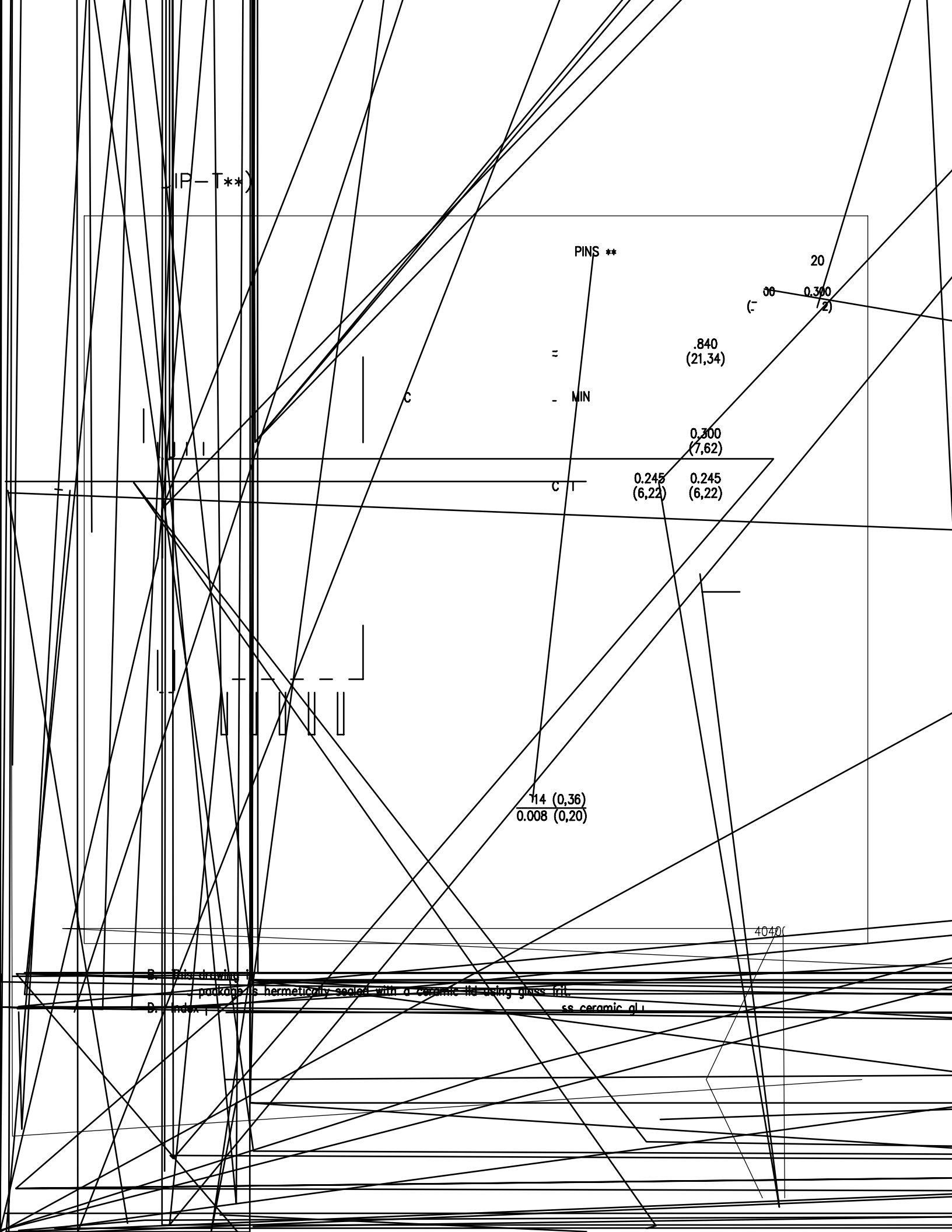
PINS **
20
0.300
.840
(21,34)
MIN
0.300
(7,62)
0.245
(6,22)
0.245
(6,22)
114 (0,36)
0.008 (0,20)
B. This drawing is
package is hermetically sealed with a ceramic lid using glass frit.
D. Index
ss ceramic gl

(24,43)

4040140/D 01/11

NOTES: A. All linear dimensions are in inches (millimeters).