Data Sheet June 21, 2010 FN9259.3

Multiphase PWM Regulator for IMVP-6+ Mobile CPUs

The ISL6260C is a multiple phase PWM buck regulator for miroprocessor core power supply. The multiple phase implementation results in better system performance, superior thermal management, lower component cost, reduced power dissipation, and smaller implementation area. The ISL6260C multiphase controller together with ISL6208 external gate drivers provide a complete solution to power Intel's mobile microprocessors. The PWM modulator of ISL6260C is based on Intersil's Robust Ripple Regulator technology (R^3). Compared with the traditional multiphase buck regulator, the R^3 modulator commands variable switching frequency during load transients, which achieves faster transient response. With the same modulator, the switching frequency is reduced at light load conditions resulting higher operation efficiency.

Intel Mobile Voltage Positioning (IMVP) reduces power dissipation for Intel Pentium processors. The ISL6260C is designed to be completely compliant with IMVP-6+ specifications. ISL6260C responds to PSI# signal by adding or dropping PWM2 and adjusting overcurrent protection accordingly. To reduce audible noise, the DPRSLPVR signal can be used to reduce output voltage slew rates when entering and exiting Deeper Sleep State according to Intel specification.

The ISL6260C has several other key features. ISL6260C reports output power through a power monitor pin. Current sense can be achieved by using either inductor DCR or discrete precision resistor. In the case of DCR current sensing, a single NTC thermistor is used to thermally compensate the inductor DCR variation with temperature. A unity gain, differential amplifier is available for remote voltage sensing. This allows the voltage on the CPU die to be accurately regulated to meet Intel IMVP-6+ specifications.

Features

- Precision Multiphase Core Voltage Regulation
  - 0.5% System Accuracy Over Temperature
  - Enhanced Load Line Accuracy
- Microprocessor Voltage Identification Input
  - 7-Bit VID Input
  - 0.300V to 1.500V in 12.5mV Steps
  - Supports VID Changes On-The-Fly
- Multiple Current Sensing Approaches Supported
  - Lossless DCR Current Sensing
  - Precision Resistive Current Sensing
- Supports PSI# and Narrow VDC for Enhanced Battery Life (EBL) Initiatives
- Superior Noise Immunity and Transient Response
- Power Monitor and Thermal Monitor
- Differential Remote Voltage Sensing
- High Efficiency Across Entire Load Range
- Programmable 1, 2 or 3 Power Channels
- Excellent Dynamic Current Balance between Channels
- Small Footprint 40 Ld 6x6 QFN Package
- IMVP-6+ Compliant
- Pb-Free (RoHS Compliant)

Applications

- Mobile Laptop Computers

Ordering Information

PART NUMBER (Note)	PART MARKING	TEMP. RANGE (°C)	PACKAGE (Pb-Free)	PKG. DWG. #
ISL6260CCRZ	ISL6260 CCRZ	-10 to +100	40 Ld 6x6 QFN	L40.6x6
ISL6260CCRZ-T*	ISL6260 CCRZ	-10 to +100	40 Ld 6x6 QFN Tape and Reel	L40.6x6
ISL6260CIRZ	ISL6260 CIRZ	-40 to +100	40 Ld 6x6 QFN	L40.6x6
ISL6260CIRZ-T*	ISL6260 CIRZ	-40 to +100	40 Ld 6x6 QFN Tape and Reel	L40.6x6

*Please refer to TB347 for details on reel specifications.
NOTE: Intersil Pb-free plus anneal products employ special Pb-free material sets; molding compounds/die attach materials and 100% matte tin plate termination finish, which are RoHS compliant and compatible with both SnPb and Pb-free soldering operations. Intersil Pb-free products are MSL classified at Pb-free peak reflow temperatures that meet or exceed the Pb-free requirements of IPC/JEDEC J STD-020.

CAUTION: These devices are sensitive to electrostatic discharge; follow proper IC Handling Procedures.
1-888-INTERSIL or 1-888-468-3774 | Intersil (and design) is a registered trademark of Intersil Americas Inc.
Copyright © Intersil Americas Inc. 2006, 2010. All Rights Reserved
All other trademarks mentioned are the property of their respective owners.

Pinout

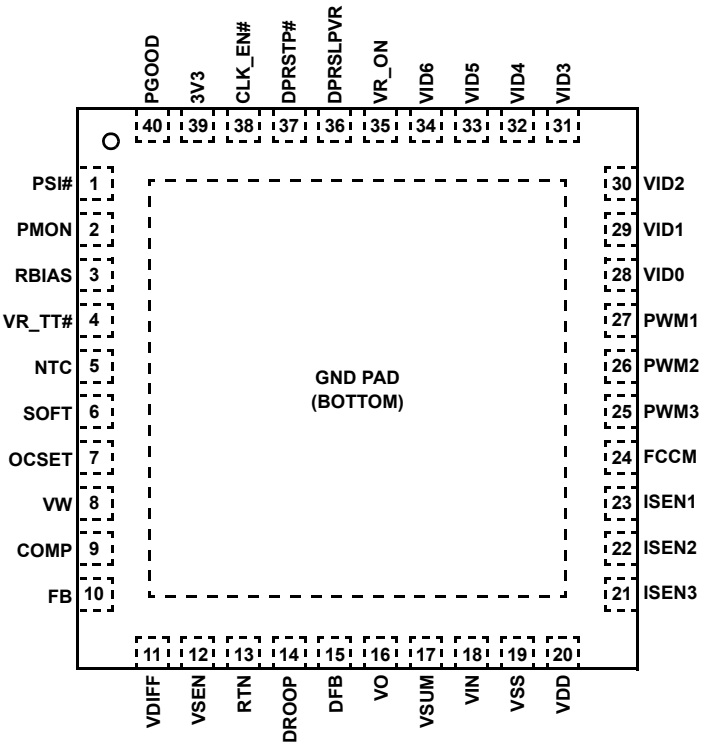

Functional Pin Description

PSI#

Low load current indicator input. When asserted low, indicates a reduced load-current condition. For ISL6260C, when PSI# is asserted low, PWM2 will be disabled.

PMON

An analog output. PMON sends out an analog signal proportional to the product of VCCSENSE voltage and the droop voltage.

RBIAS

147k Resistor to VSS sets internal current reference.

VR_TT#

Thermal overload output indicator.

NTC

Thermistor input to VR_TT# circuit.

SOFT

A capacitor from this pin to Vss sets the maximum slew rate of the output voltage. It affects both soft start and VID transitioning slew rate. Soft pin is the non-inverting input of the error amplifier.

OCSET

Overcurrent set input. A resistor from this pin to VO sets DROOP voltage limit for OC trip. A 10µA current source is connected internally to this pin.

VW

A resistor from this pin to COMP programs the switching frequency. (7kΩ gives approximately 300kHz). VW pin sources current.

COMP

This pin is the output of the error amplifier.

FB

This pin is the inverting input of error amplifier.

VDIFF

This pin is the output of the differential amplifier.

VSEN

Remote core voltage sense input. Connect to microprocessor die.

RTN

Remote voltage sensing return. Connect to ground at microprocessor die.

DROOP

Output of droop amplifier. Output = VO + DROOP.

DFB

Inverting input to droop amplifier.

VO

An input to the IC that reports the local output voltage.

VSUM

This pin is connected to the current summation junction.

VIN

Battery supply voltage, used for feed forward.

VSS

Signal ground; Connect to local controller ground.

VDD

5V bias power.

ISEN3

Individual current sensing for channel 3.

ISEN2

Individual current sensing for channel 2.

ISEN1

Individual current sensing for channel 1.

FCCM

Forced Continuous Conduction Mode (FCCM) enable pin to MOSFET drivers. It will disable diode emulation.

PWM3

PWM output for channel 3. When PWM3 is pulled to 5V VDD, PWM3 will be disabled and allow other channels to operate.

PWM2

PWM output for channel 2. For ISL6260C, PSI# low will make this output tri-state. When PWM2 is pulled to 5V VDD, PWM2 will be disabled and allow other channels to operate.

PWM1

PWM output for channel 1.

VID0, VID1, VID2, VID3, VID4, VID5, VID6

VID input with VID0 = LSB and VID6 = MSB.

CLK_EN#

Digital output to enable System PLL Clock; Goes active after 13 switching cycles after Vcore is within 10% of Boot Voltage.

PGOOD

Power Good open-drain output. Will be pulled up externally by a 680Ω resistor to VCCP or 1.9kΩ to 3.3V.

3V3

3.3V supply voltage for CLK_EN# logic, such an implementation will improve power consumption from 3.3V compared to open drain circuit other wise.

VR_ON

Voltage Regulator enable input. A high level logic signal on this pin enables the regulator.

DPRSLPVR

Deeper Sleep Enable signal. At steady state, a high level logic signal on this pin indicates that the micro-processor is in Deeper Sleep Mode. Between active and sleep mode transition, high logic level on this pin programs slow C4 entry and exit; low logic level on this pin programs large charging or discharging soft pin current, and therefore fast output voltage transition slew rate.

DPRSTP#

Deeper Sleep Enable signal. A low level logic signal on this pin indicates that the micro-processor is in Deeper Sleep Mode.

Absolute Maximum Ratings

Supply Voltage, V_{DD} . . . . . -0.3 to +7V
Battery Voltage, V_{IN} . . . . . +25V
Open Drain Outputs, PGOOD, VR_TT# . . . . . -0.3 to +7V
All Other Pins . . . . . -0.3V to (V_{DD} + 0.3V)

Operating Conditions

Temperature Range . . . . . -40°C to +100°C
Supply Voltage Range (Typical) . . . . . +5V ±5%

Thermal Information

Thermal Resistance (Notes 1, 2)	θ_{JA} (°C/W)	θ_{JC} (°C/W)
QFN Package	30	5.5

Maximum Junction Temperature . . . . . +150°C
Storage Temperature . . . . . -65°C to +150°C
Pb-Free Reflow Profile . . . . . see link below
http://www.intersil.com/pbfree/Pb-FreeReflow.asp

CAUTION: Do not operate at or near the maximum ratings listed for extended periods of time. Exposure to such conditions may adversely impact product reliability and result in failures not covered by warranty.

NOTES:

1. θ_{JA} is measured with the component mounted on a low effective thermal conductivity test board in free air. See Tech Brief TB379 for details.
2. For θ_{JC}, the “case temp” location is the center of the exposed metal pad on the package underside.

Electrical Specifications

Operating Conditions: V_{DD} = 5V, T_A = -40°C to +100°C, unless otherwise noted. Parameters with MIN and/or MAX limits are 100% tested at +25°C, unless otherwise specified. Temperature limits established by characterization and are not production tested.

PARAMETER	SYMBOL	TEST CONDITIONS	MIN	TYP	MAX	UNITS
INPUT POWER SUPPLY						
+5V Supply Current	I_{VDD}	VR_ON = 3.3V		3.6	4.2	mA
		VR_ON = 0V			1	µA
+3.3V Supply Current	I_{3V3}	No load on CLK_EN#			1	µA
Battery Supply Current	I_{VIN}	VR_ON = 0V			1	µA
V_{IN} Input Resistance	R_{VIN}	VR_ON = 3.3V		900		kΩ
Power-On-Reset Threshold	POR_r	V_{DD} rising		4.35	4.5	V
	POR_f	V_{DD} falling	3.95	4.15		V
		VDD falling, T_A = -10°C to +100°C	4.00	4.15		V
SYSTEM AND REFERENCES						
System Accuracy	%Error (V_{CC_CORE})	No load; closed loop, active mode range VID = 0.75V - 1.50V	-0.8		+0.8	%
		No load; closed loop, active mode range VID = 0.75V - 1.50V, T_A = -10°C to +100°C	-0.5		+0.5	%
		VID = 0.5V - 0.7375V	-10		+10	mV
		VID = 0.5V - 0.7375V, T_A = -10°C to +100°C	-8		+8	mV
		VID = 0.3 - 0.4875V	-18		+18	mV
		VID = 0.3 - 0.4875V, T_A = -10°C to +100°C	-15		+15	mV
V_{BOOT}			1.176	1.200	1.224	V
Maximum Output Voltage	$V_{CC_CORE(max)}$	VID = [0000000]		1.500		V
Minimum Output Voltage	$V_{CC_CORE(min)}$	VID = [1100000]		0.300		V
VID Off State		VID = [1111111]		0.0		V
R_{BIAS} Voltage		R_{BIAS} = 147kΩ	1.45	1.47	1.49	V
CHANNEL FREQUENCY						
Nominal Channel Frequency	$f_{SW(nom)}$	Rfset = 7kΩ, 3 channel operation, V_{COMP} = 2V	285	300	315	kHz
Adjustment Range		See Equation 4 R_{FSET} selection	200		500	kHz
AMPLIFIERS						
Droop Amplifier Offset			-0.3		+0.3	mV
Error Amp DC Gain	A_{v0}	(Note 3)		90		dB
Error Amp Gain-Bandwidth Product	GBW	C_L= 20pF (Note 3)		18		MHz

Electrical Specifications Operating Conditions: V_{DD} = 5V, T_A = -40°C to +100°C, unless otherwise noted. Parameters with MIN and/or MAX limits are 100% tested at +25°C, unless otherwise specified. Temperature limits established by characterization and are not production tested. **(Continued)**

PARAMETER	SYMBOL	TEST CONDITIONS	MIN	TYP	MAX	UNITS
FB Input Current	$I_{IN(FB)}$			10	150	nA
ISEN						
Imbalance Voltage		Maximum of ISENs - Minimum of ISENs			2	mV
Input Bias Current				20		nA
SOFT CURRENT						
Soft-start Current	I_{SS}		-47	-42	-37	µA
SOFT Geyserville Current	I_{GV}	|SOFT-VDAC| >100mV	±180	±205	±230	µA
SOFT Deeper Sleep Entry Current	I_{C4}	DPRSLPVR = 3.3V	-47	-42	-37	µA
SOFT Deeper Sleep Exit Current	I_{C4EA}	DPRSLPVR = 3.3V	37	42	47	µA
SOFT Deeper Sleep Exit Current	I_{C4EB}	DPRSLPVR = 0V	180	205	230	µA
POWER GOOD AND PROTECTION MONITORS						
PGOOD Low Voltage	V_{OL}	I_{PGOOD}= 4mA		0.26	0.4	V
PGOOD Leakage Current	I_{OH}	PGOOD = 3.3V	-1		1	µA
PGOOD Delay	tpgd	CLK_ENABLE# LOW to PGOOD HIGH	6.3	7.6	8.9	ms
Overvoltage Threshold	OV_H	VO rising above setpoint for >1ms	160	200	240	mV
Severe Overvoltage Threshold	OV_{HS}	VO rising for >2µs	1.675	1.7	1.725	V
OCSET Reference Current		$I(R_{BIAS})$ = 10µA	9.8	10	10.2	µA
OC Threshold Offset		DROOP rising above OCSET for >150µs	-2		4	mV
Current Imbalance Threshold		One ISEN above another ISEN for >1.2ms		9		mV
Undervoltage Threshold (VDIFF/SOFT)	UV_f	VO falling below setpoint for >1.2ms	-355	-295	-235	mV
LOGIC THRESHOLDS						
VR_ON and DPRSLPVR Input Low	$V_{IL(3.3V)}$				1.0	V
VR_ON and DPRSLPVR Input High	$V_{IH(3.3V)}$		2.3			V
VID0-VID6, PSI#, DPRSTP# Input Low	$V_{IL(1.0V)}$				0.3	V
VID0-VID6, PSI#, DPRSTP# Input High	$V_{IH(1.0V)}$		0.7			V
PWM						
PWM (PWM1-PWM3) Output Low	$V_{OL(5.0V)}$	Sinking 5mA			1.0	V
FCCM Output Low	VOL_FCCM	Sinking 3mA			1.0	V
PWM (PWM1-PWM3) and FCCM Output High	$V_{OH(5.0V)}$	Sourcing 5mA	3.5			V
PWM Tri-State Leakage		PWM = 2.5V	-1		1	µA
THERMAL MONITOR						
NTC Source Current		NTC = 1.3V	53	60	67	µA
Over-Temperature Threshold		V (NTC) falling	1.18	1.2	1.22	V
VR_TT# Low Output Resistance	R_{TT}	I = 20mA		6.5	9	Ω
CLK_EN# OUTPUT LEVELS						
CLK_EN# High Output Voltage	V_{OH}	3V3 = 3.3V, I = -4mA	2.9	3.1		V
CLK_EN# Low Output Voltage	V_{OL}	I = 4mA		0.26	0.4	V
POWER MONITOR						
PMON Output Voltage	Vpmon	VSEN = 1.2V, Droop-Vo = 80mV	1.638	1.68	1.722	V
		VSEN = 1.0V, Droop-Vo = 20mV	0.308	0.35	0.392	V

Electrical Specifications

Operating Conditions: V_{DD} = 5V, T_A = -40°C to +100°C, unless otherwise noted. Parameters with MIN and/or MAX limits are 100% tested at +25°C, unless otherwise specified. Temperature limits established by characterization and are not production tested. **(Continued)**

PARAMETER	SYMBOL	TEST CONDITIONS	MIN	TYP	MAX	UNITS
PMON Maximum Voltage	Vpmonmax		2.8	3		V
PMON Sourcing Current		VSEN = 1.0V, Droop-Vo = 50mV	2.0			mA
PMON Sinking Current		VSEN = 1.0V, Droop-Vo = 50mV	2.0			mA
Maximum Current Sinking Capability		See Figure 36	Vpmon/ 250	Vpmon/ 180	Vpmon/ 130	A
PMON Impedance		When PMON is within its sourcing/sinking current range (Note 3)		7		Ω

3. Limits established by characterization and are not production tested.

Typical Operating Performance 3 Phase, DCR Sense, (1) 7821, (2) 7832 per phase, 300kHz, 0.5µH

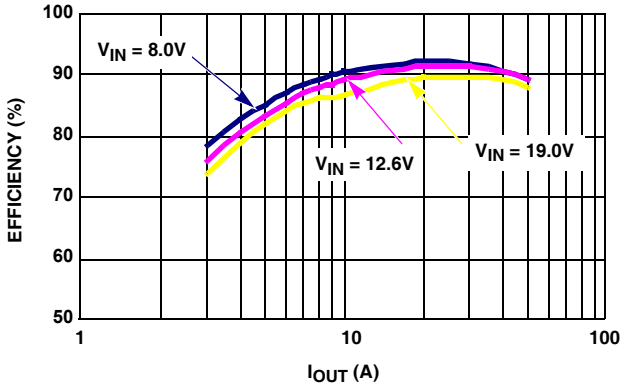

FIGURE 1. ACTIVE MODE EFFICIENCY, 3 PHASE, CCM, PSI# = HIGH, VID = 1.4375V

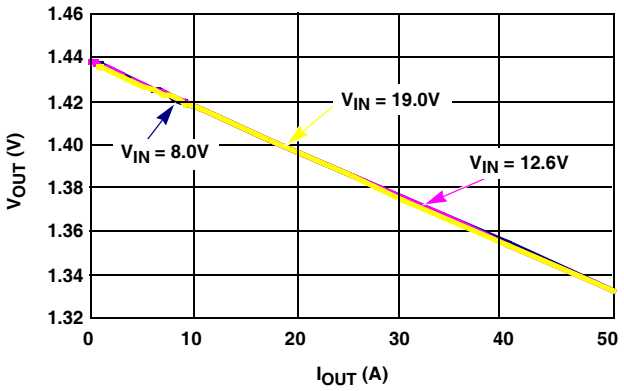

FIGURE 2. ACTIVE MODE LOAD LINE, 3 PHASE, CCM, PSI# = HIGH VID = 1.435V

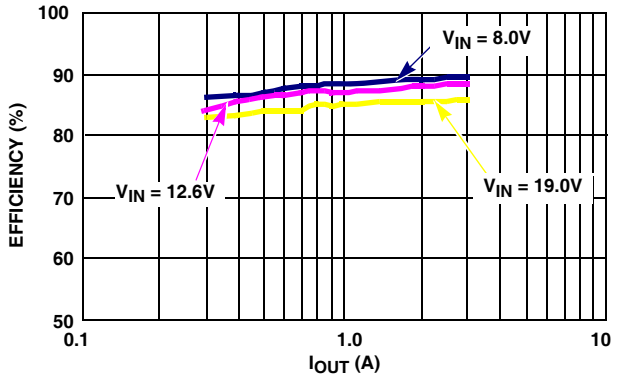

FIGURE 3. DEEPER SLEEP MODE EFFICIENCY, 3 PHASE, DCM OPERATION, PSI# = LOW, VID = 1.4375V

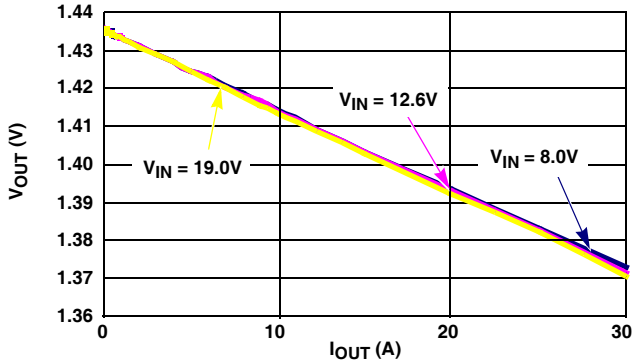

FIGURE 4. DEEPER SLEEP MODE LOAD LINE, 3 PHASE, CCM, PSI# = LOW VID = 1.435V

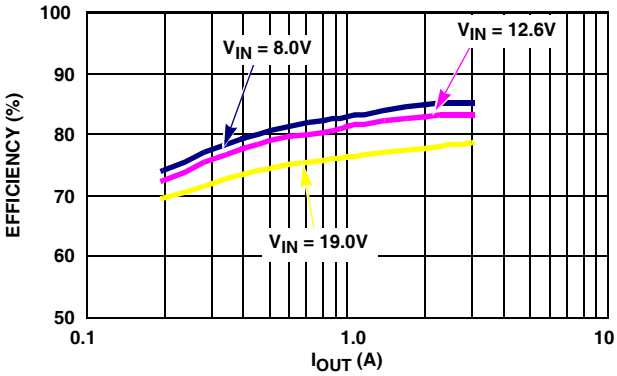

FIGURE 5. DEEPER SLEEP MODE EFFICIENCY, 3 PHASE, DCM OPERATION, PSI# = LOW, VID = 0.75V

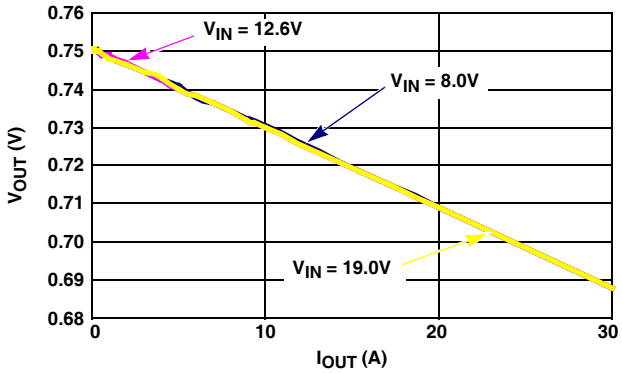

FIGURE 6. DEEPER SLEEP MODE LOAD LINE, 3 PHASE, DCM OPERATION, PSI# = LOW, VID = 0.75V

Typical Operating Performance 3 Phase, DCR Sense, (1) 7821, (2) 7832 per phase, 300kHz, 0.5µH (Continued)

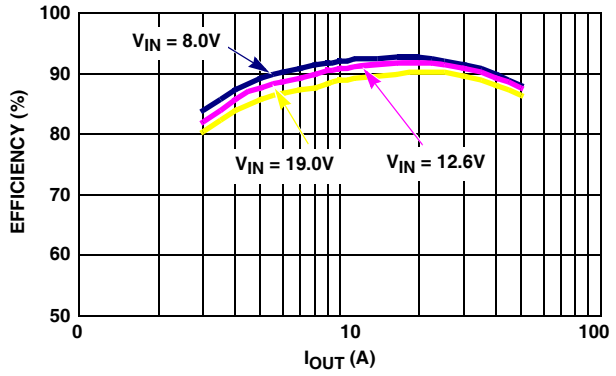

FIGURE 7. ACTIVE MODE EFFICIENCY, 2 PHASE, CCM, PSI# = HIGH, VID = 1.4375V

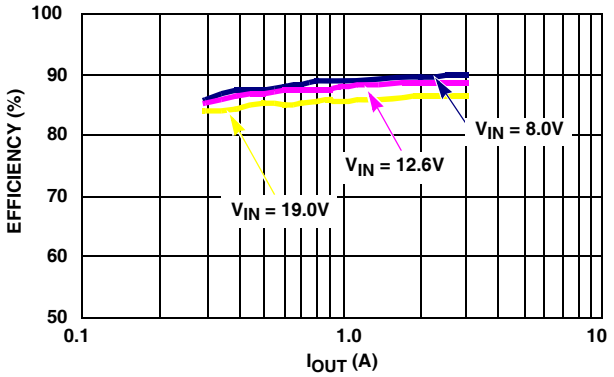

FIGURE 8. DEEPER SLEEP MODE EFFICIENCY, 2 PHASE, DCM OPERATION, PSI# = LOW, VID = 1.4375V

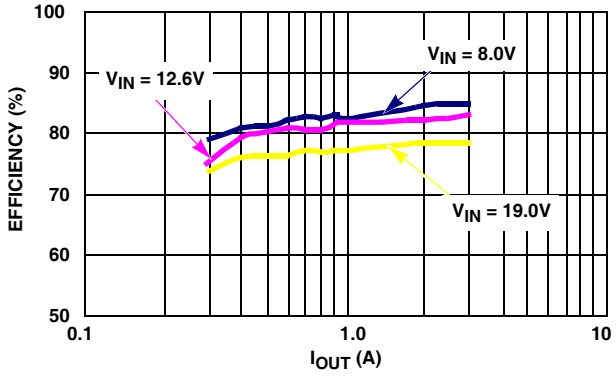

FIGURE 9. DEEPER SLEEP MODE EFFICIENCY, 2 PHASE, DCM OPERATION, PSI# = LOW, VID = 0.75V

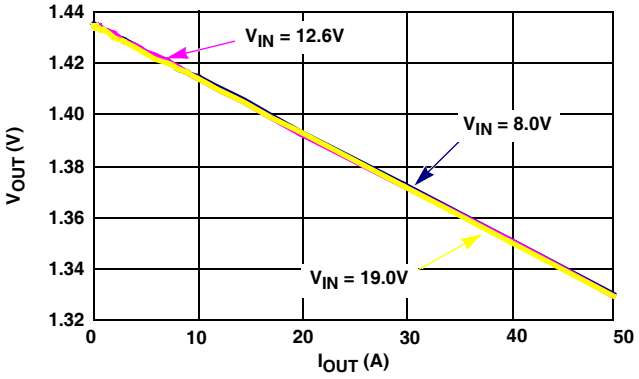

FIGURE 10. ACTIVE MODE LOAD LINE, 2 PHASE, CCM, PSI# = HIGH, VID = 1.435V

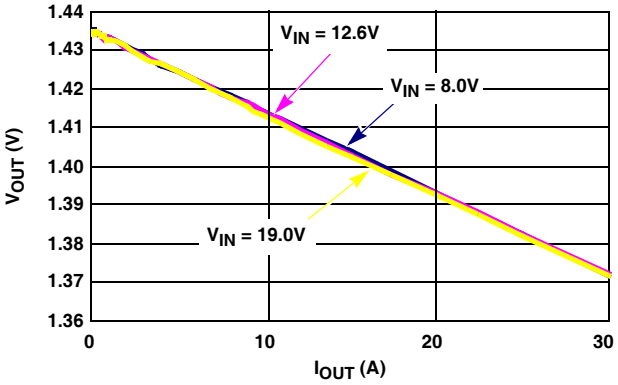

FIGURE 11. DEEPER SLEEP MODE LOAD LINE, 2 PHASE, DCM OPERATION, PSI# = LOW, VID = 1.4375V

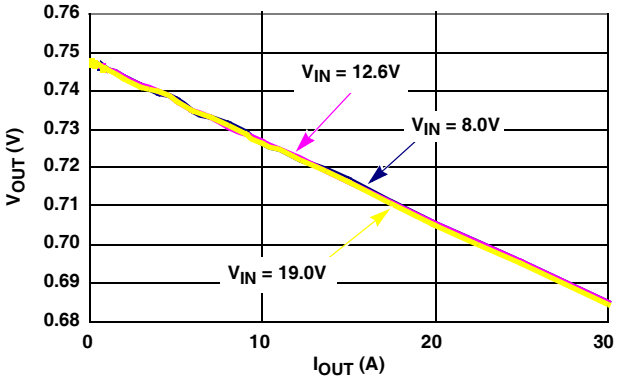

FIGURE 12. DEEPER SLEEP MODE LOAD LINE, 2 PHASE, DCM OPERATION, PSI# = LOW, VID = 0.75V

Typical Operating Performance

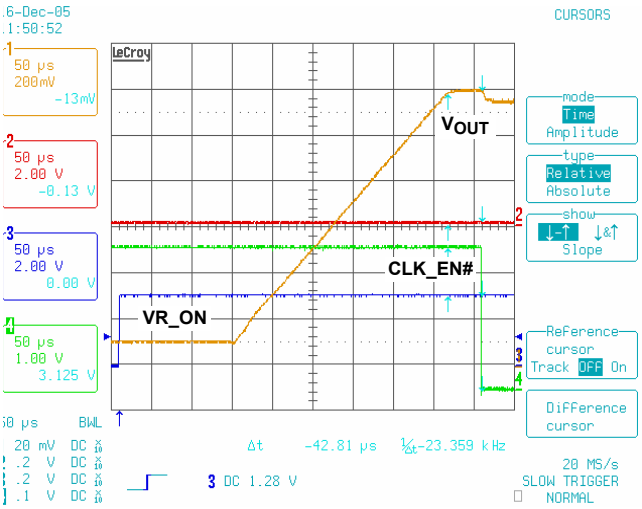

FIGURE 13. SOFT-START WAVEFORM 0V TO 1.2V (BOOT VOLTAGE) AND CLK_EN# TIMING

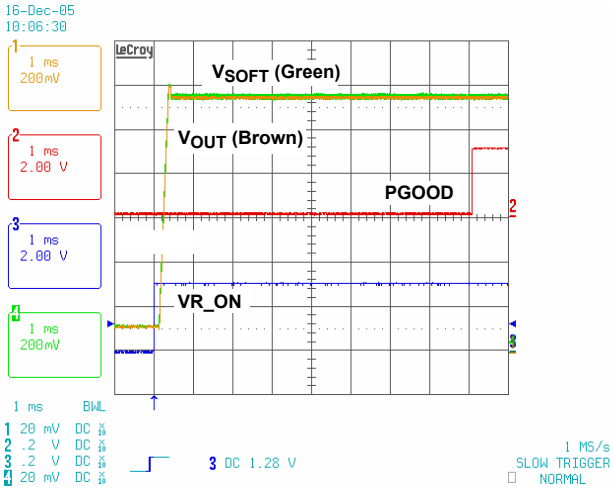

FIGURE 14. SOFT-START WAVEFORM SHOWING PGOOD

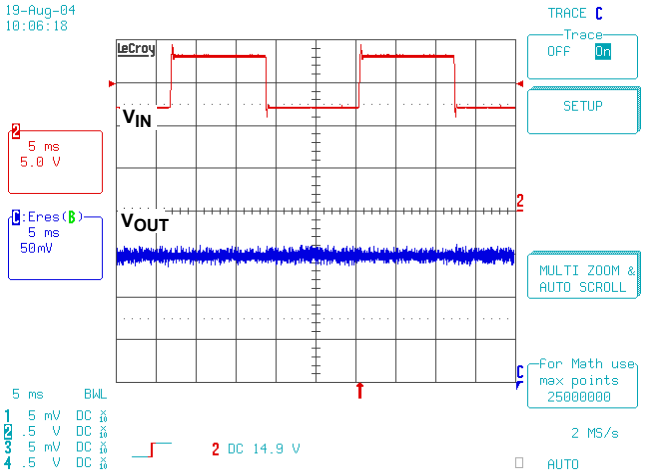

FIGURE 15. 12V-18V INPUT LINE TRANSIENT RESPONSE

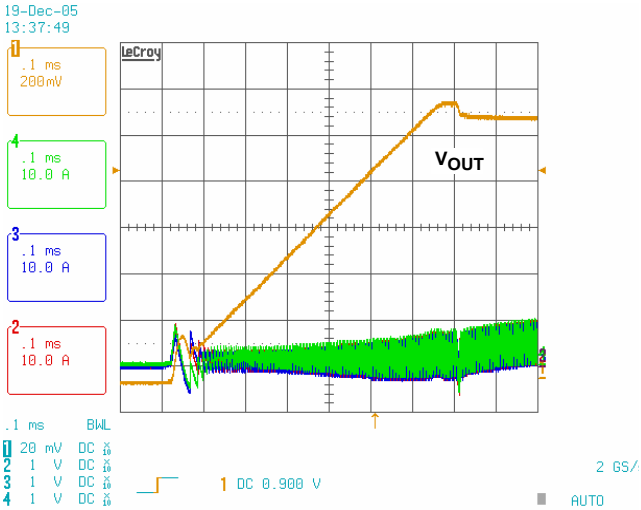

FIGURE 16. SOFT-START INRUSH CURRENT, V_{IN} = 8V

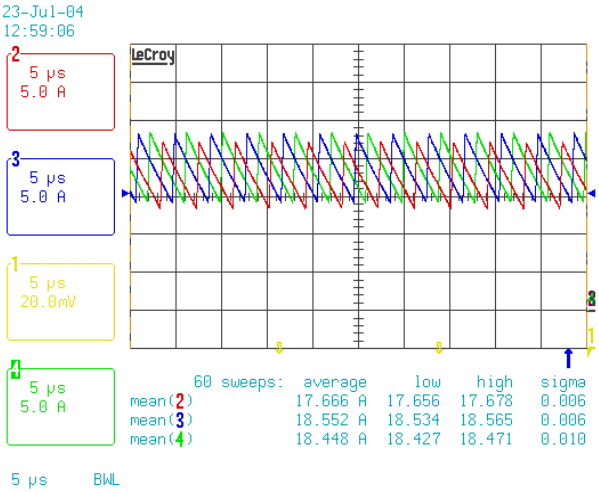

FIGURE 17. 3 PHASE CURRENT BALANCE, FULL LOAD = 50A

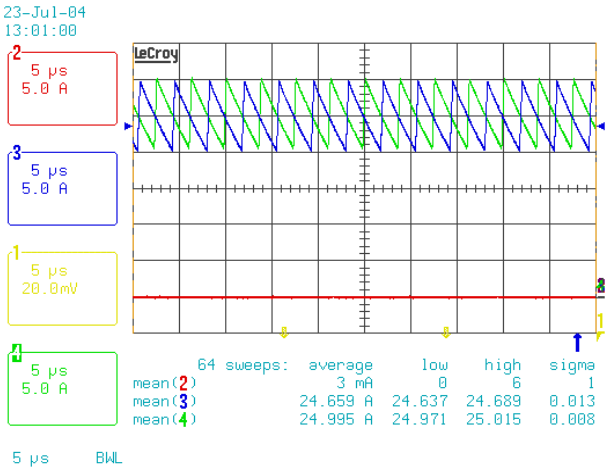

FIGURE 18. 2 PHASE CURRENT BALANCE, FULL LOAD = 50A

Typical Operating Performance (Continued)

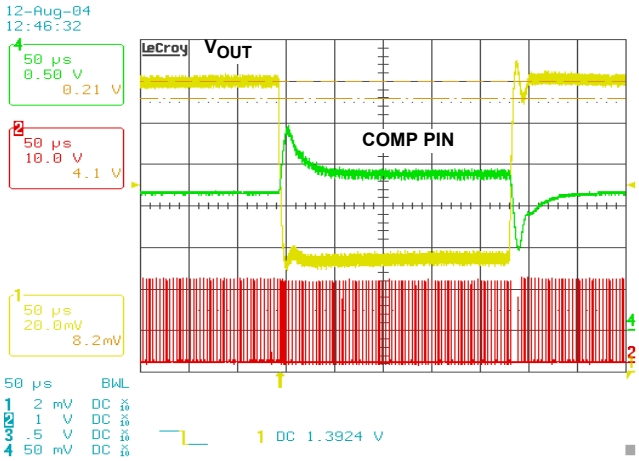

FIGURE 19. TRANSIENT LOAD RESPONSE, 40A LOAD STEP @ 200A/µs, 3 PHASE

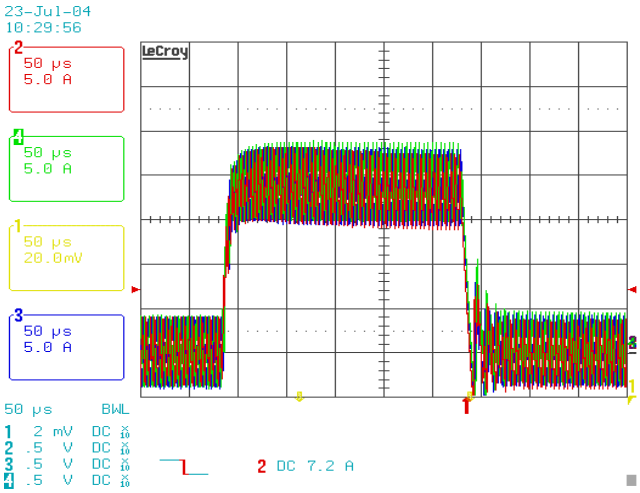

FIGURE 20. TRANSIENT LOAD 3 PHASE OPERATION - CURRENT BALANCE

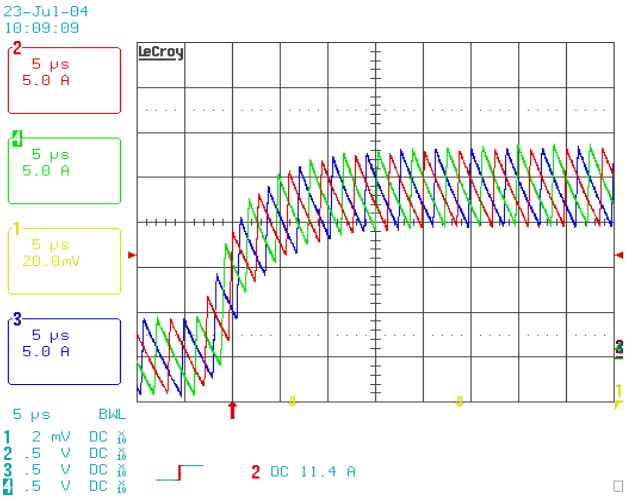

FIGURE 21. TRANSIENT LOAD 3 PHASE OPERATION, ZOOM OF RISING EDGE CURRENT BALANCE

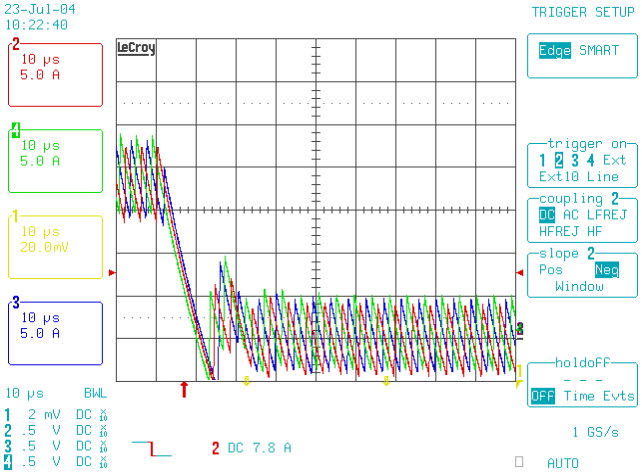

FIGURE 22. TRANSIENT LOAD 3 PHASE OPERATION, ZOOM OF FALLING EDGE CURRENT BALANCE

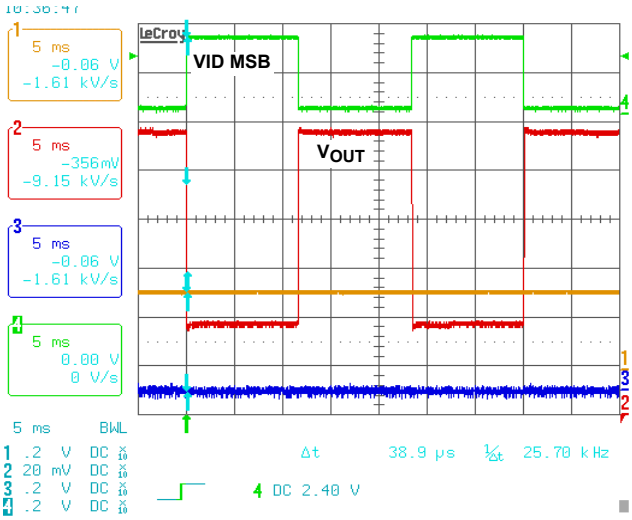

FIGURE 23. IVID MSB BIT CHANGE FROM 1.4375V TO 0.65V SHOWING 9mV/µs SLEW RATE, DPRSLPVR = 0, DPRSTP# = 1

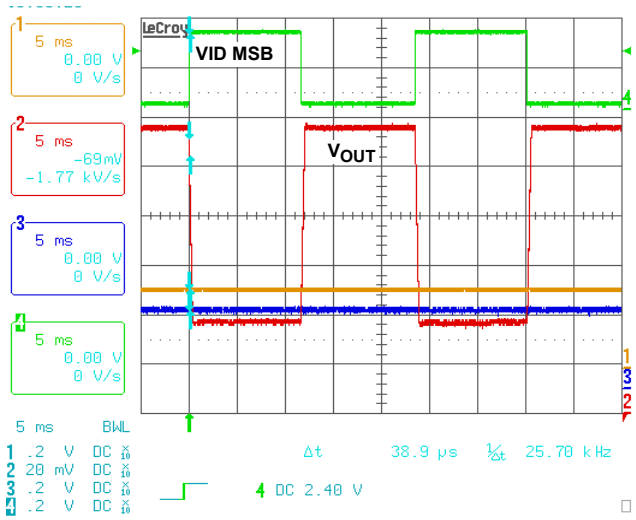

FIGURE 24. SLEW RATE ENTERING C4, VID MSB BIT CHANGE FROM 1.4375V TO 0.65V SHOWING 2mV/µs SLEW RATE, DPRSLPVR = 1, DPRSTP# = 0

Typical Operating Performance (Continued)

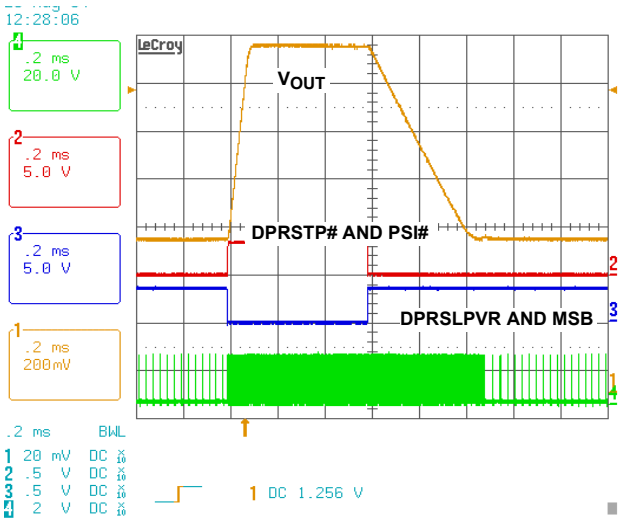

FIGURE 25. C4 ENTRY AND EXIT SLEW RATES WITH DPRSLPVR AND DPRSTP#

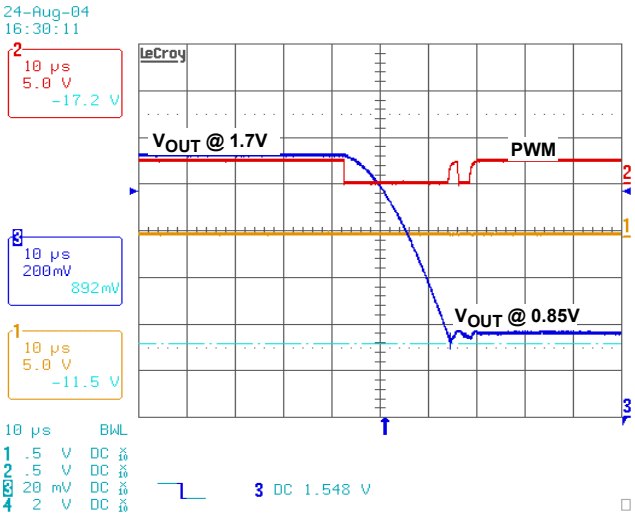

FIGURE 26. 1.7V OVP SHOWING OUTPUT PULLED LOW TO 0.85V AND PWM TRI_STATE

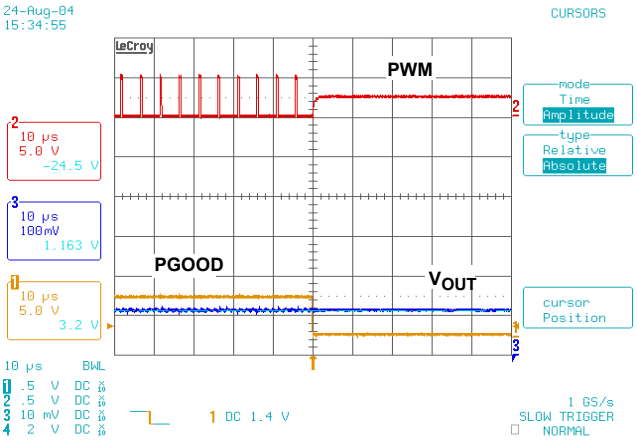

FIGURE 27. UNDERVOLTAGE RESPONSE SHOWING PWM TRI-STATE, VOUT < VID - 300mV

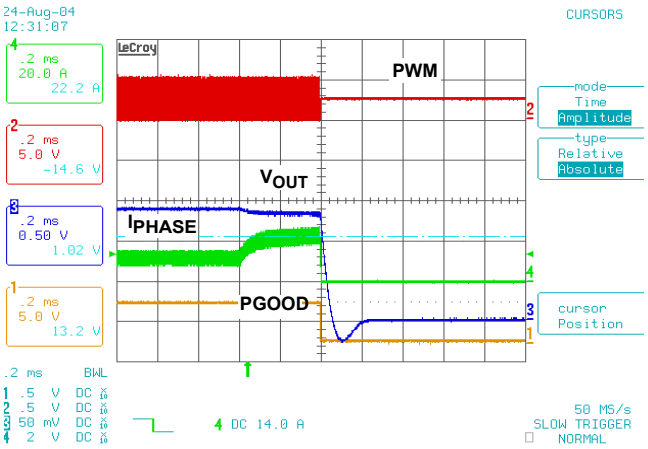

FIGURE 28. OCP - RESPONSE

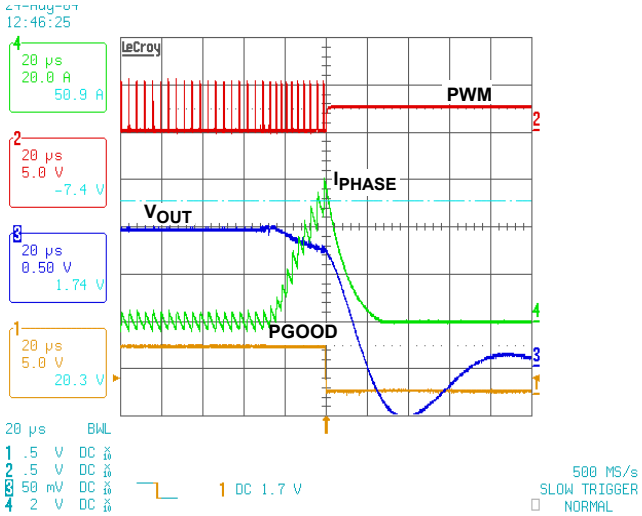

FIGURE 29. WOCP - SHORT CIRCUIT PROTECTION

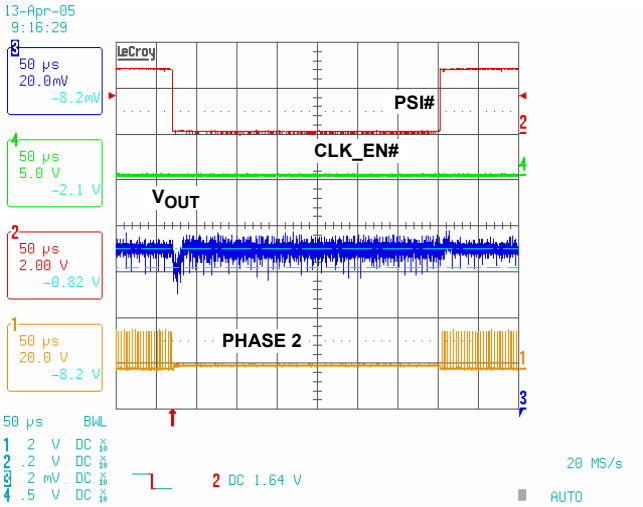

FIGURE 30. ISL6260C, PHASE ADDING AND DROPPING IN ACTIVE MODE, LOAD CURRENT = 15A

Typical Operating Performance (Continued)

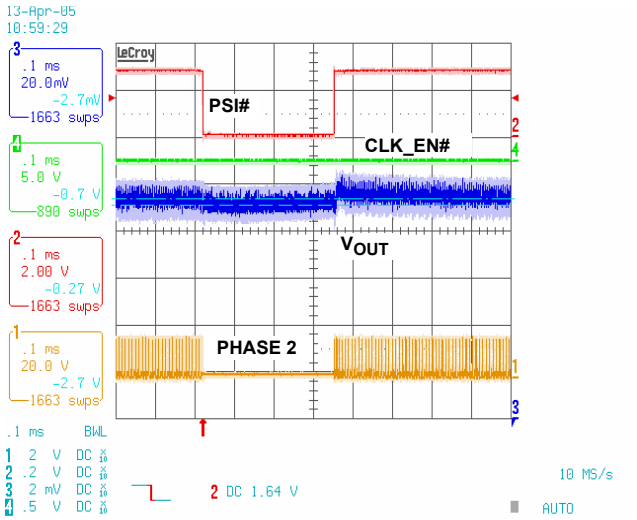

FIGURE 31. ISL6260C PHASE ADDING AND DROPPING IN DEEPER SLEEP MODE, LOAD CURRENT = 4.35A

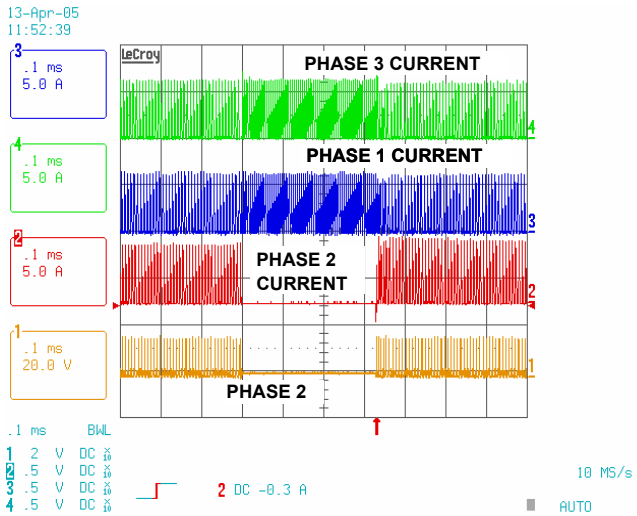

FIGURE 32. ISL6260C, INDUCTOR CURRENT WAVEFORM WITH PHASE ADDING AND DROPPING IN DCM OR DEEPER SLEEP MODE

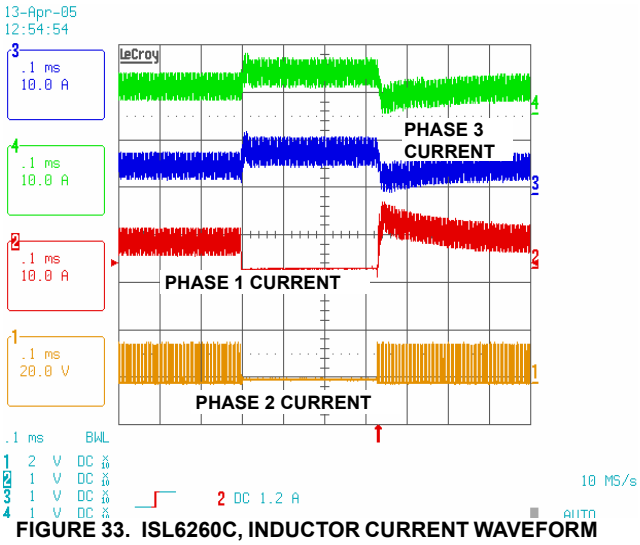

FIGURE 33. ISL6260C, INDUCTOR CURRENT WAVEFORM WITH PHASE ADDING AND DROPPING IN CCM OR ACTIVE MODE

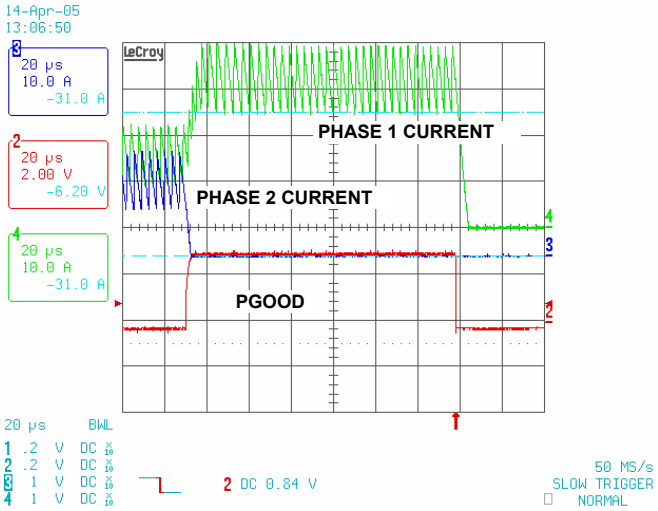

FIGURE 34. ISL6260C, OVERCURRENT DUE TO PHASE DROPPING

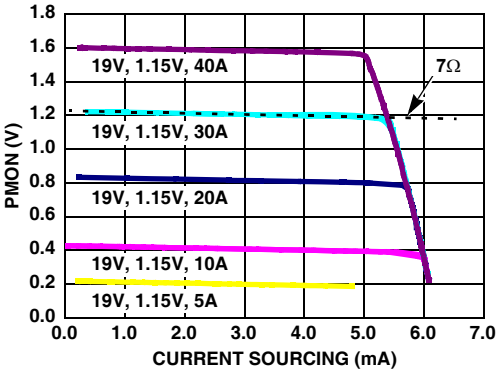

FIGURE 35. POWER MONITOR CURRENT SOURCING CAPABILITY

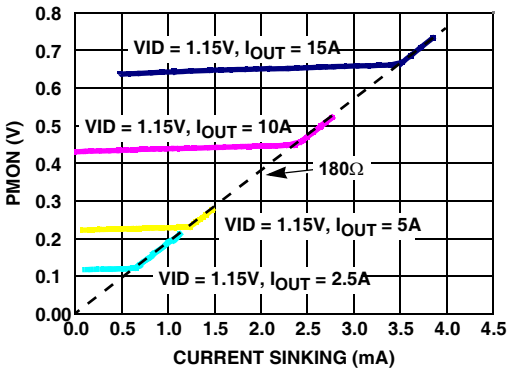

FIGURE 36. POWER MONITOR CURRENT SINKING CAPABILITY

Typical Operating Performance (Continued)

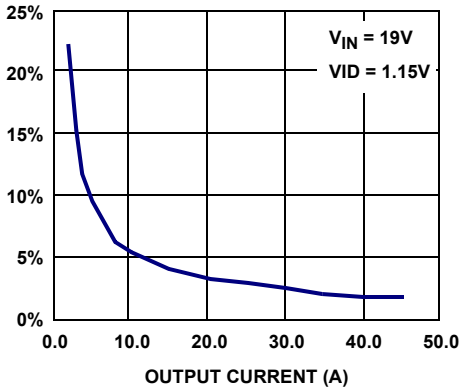

FIGURE 37. POWER MONITOR ACCURACY

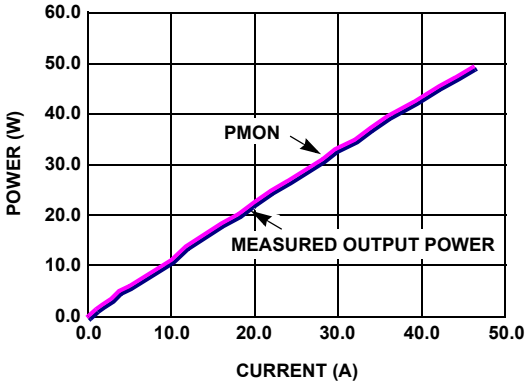

FIGURE 38. POWER MONITOR vs OUTPUT CURRENT

Simplified Application Circuit for DCR Current Sensing

Figure 39 shows a simplified application circuit for the ISL6260C converter with inductor DCR current sensing. The ISL6208 MOSFET gate driver has a force-continuous-conduction-mode (FCCM) input, that when disabled, allows the regulator to operate in Diode Emulation for improved light load efficiency. As shown in the circuit diagram, the FCCM pin is connected to ISL6260C, which programs the CCM or DCM mode.

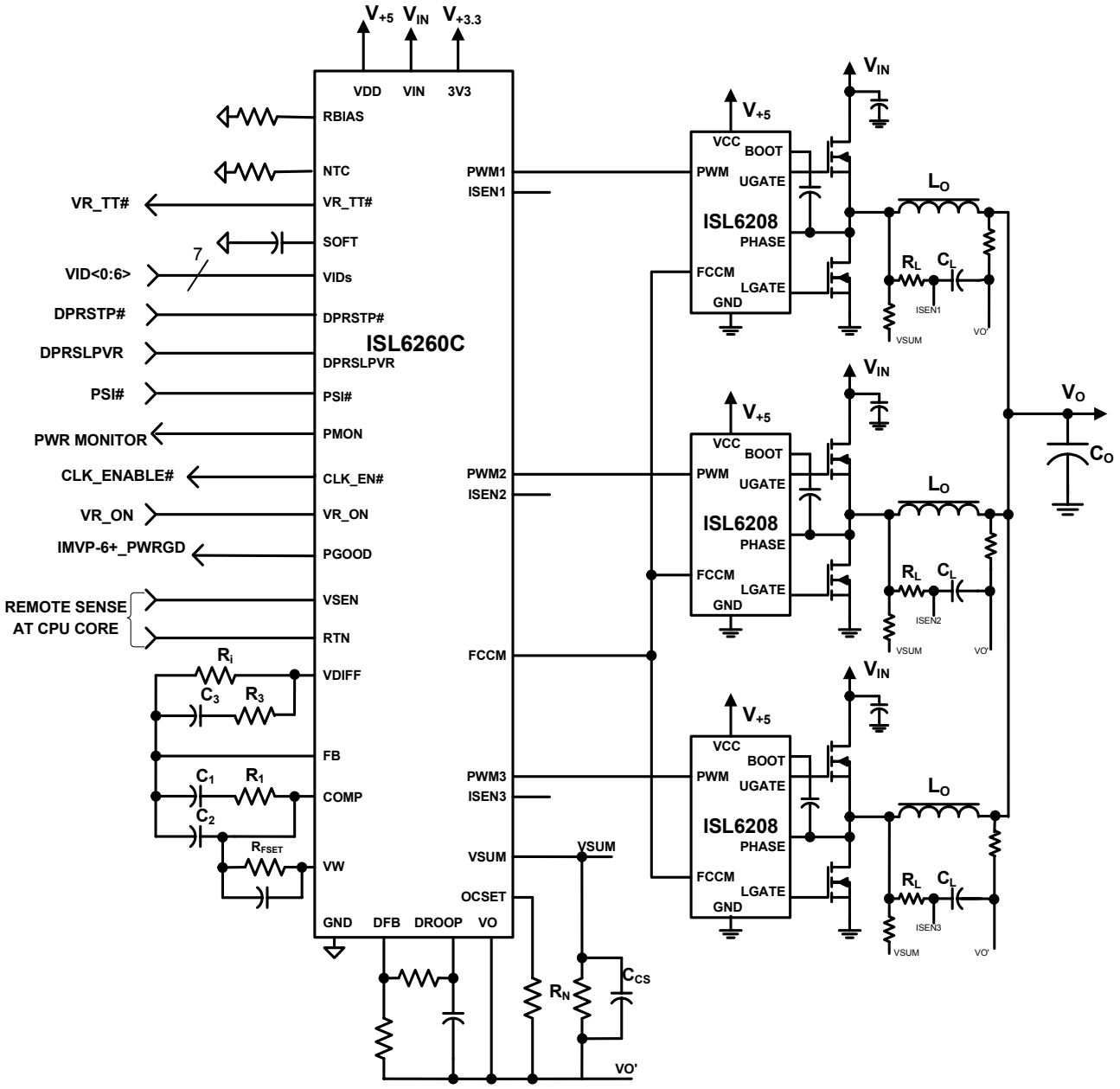

FIGURE 39. TYPICAL APPLICATION CIRCUIT FOR DCR SENSING

Simplified Application Circuit for Resistive Current Sensing

Figure 40 shows a simplified application circuit for the ISL6260C converter with external resistor current sensing. A capacitor is added in parallel with RL in order to improve the stability margin of the channel current balance loop. No NTC thermistor is needed and the droop circuit is simplified.

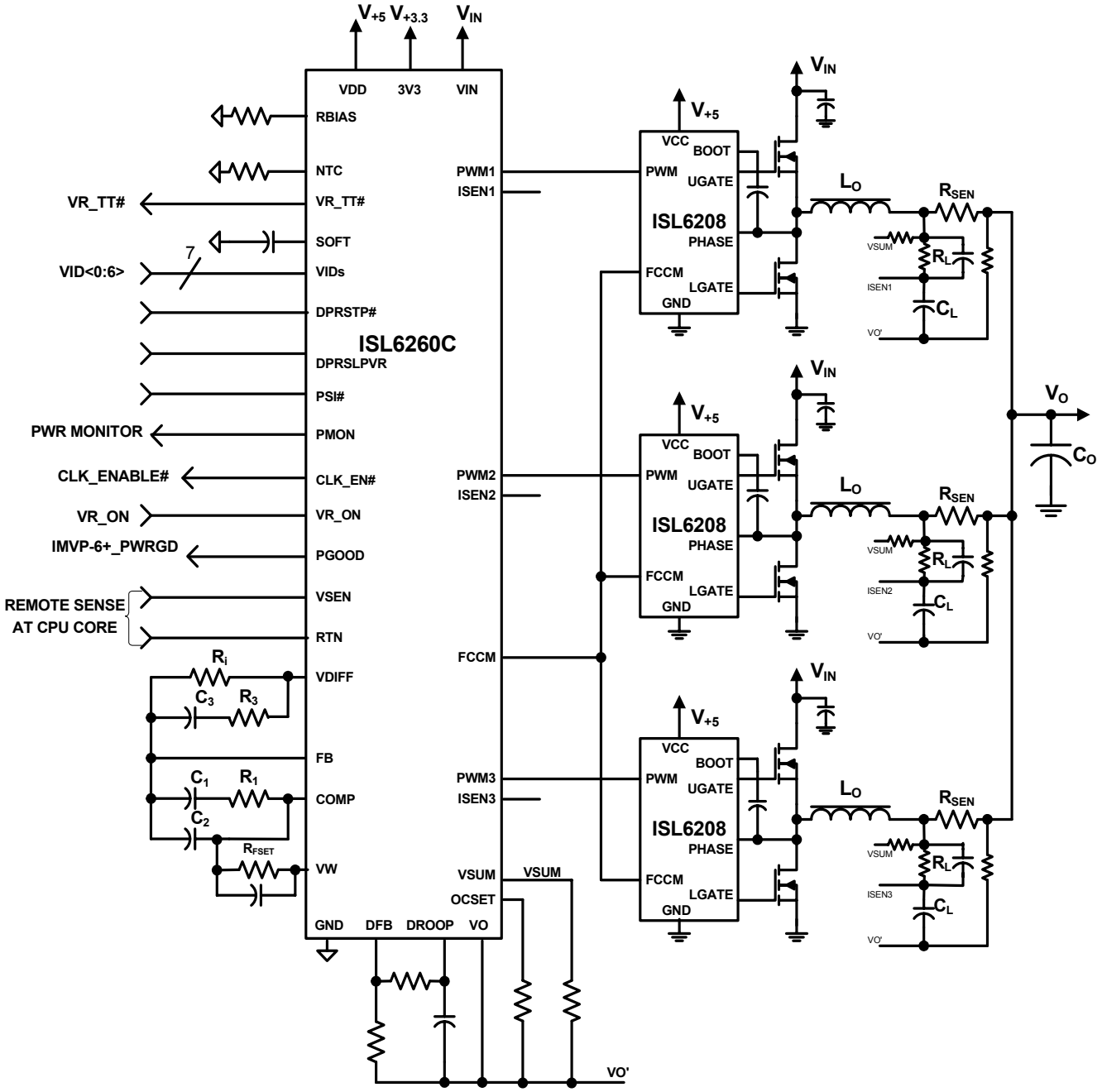

FIGURE 40. TYPICAL APPLICATION CIRCUIT FOR DISCRETE RESISTOR CURRENT SENSING

Functional Block Diagram

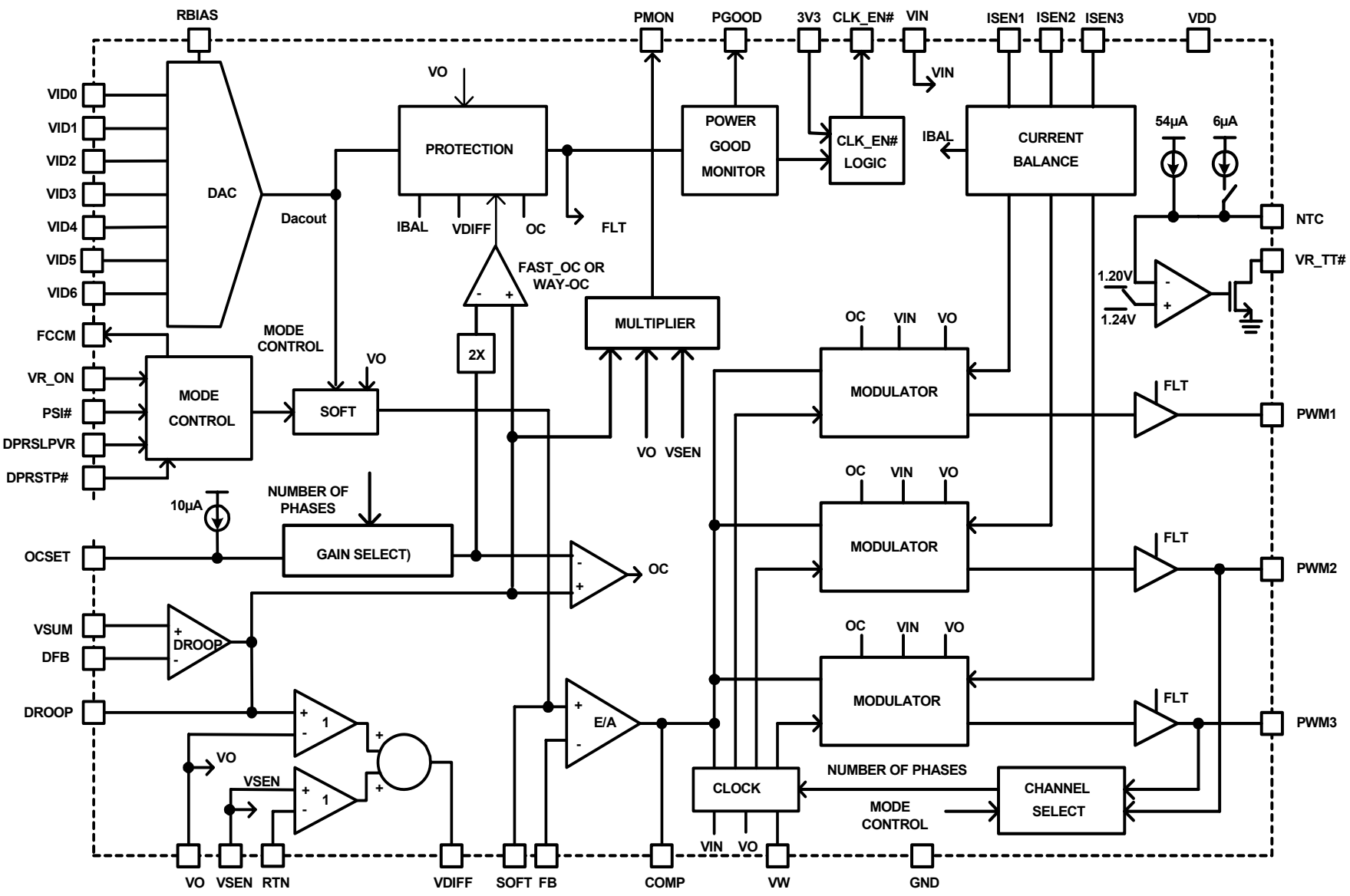

FIGURE 41. SIMPLIFIED BLOCK DIAGRAM

Theory of Operation

Operational Description

The ISL6260C is a multiphase regulators implementing Intel® IMVP-6+ protocol. It can be programmed for one-, two- or three-channel operation for microprocessor core applications up to 70A. With ISL6208 gate driver capable of diode emulation, the ISL6260C provides optimum efficiency in both heavy and light conditions.

ISL6260C uses Intersil patented R^3 (Robust Ripple Regulator™) modulator. The R^3 modulator combines the best features of fixed frequency PWM and hysteretic PWM while eliminating many of their shortcomings. The ISL6260C modulator internally synthesizes analog signals inside the IC emulating the inductor ripple currents and use hysteretic comparators on those signals to determine switching pulse widths. Operating on these large-amplitude, noise-free synthesized signals allows the ISL6260C to achieve lower output ripple and lower phase jitter than conventional hysteretic and fixed PWM mode controllers. Unlike conventional hysteretic converters, the ISL6260C has an error amplifier that allows the controller to maintain a 0.5% output voltage accuracy. At heavy load conditions, the ISL6260 is switching at a relatively constant switching frequency similar to fixed frequency PWM controller. At light load conditions, the ISL6260C is switching at a frequency proportional to load current similar to hysteretic mode controller.

ISL6260C disables PWM2 when PSI# is asserted low. And the power monitor pin provides an analog signal representing the output power of the converter.

Start-up Timing

With the controller's +5V V_{DD} voltage above the POR threshold, the start-up sequence begins when VR_ON exceeds the 3.3V logic HIGH threshold. Approximately 120µs later SOFT and V_{OUT} start ramping up to the boot voltage of 1.2V. During this interval, the SOFT capacitor is charged with approximately 40µA. Therefore, if the SOFT capacitor is selected to be 20nF, the SOFT ramp will be at about 2mV/µs for a soft-start time of 600µs. Once V_{OUT} (VDIFF) is within 10% of the boot voltage for 13 PWM cycles (43µs for frequency = 300kHz), then CLK_EN# is pulled LOW and the SOFT capacitor is charged up with approximately 200µA. Therefore, V_{OUT} slews at +10mV/µs to the voltage set by the VID pins. Approximately 7ms later, PGOOD is asserted HIGH. A typical start-up timing is shown in Figure 42. Similar results occur if VR_ON is tied to V_{DD}, with the soft-start sequence starting 120µs after V_{DD} crosses the POR threshold.

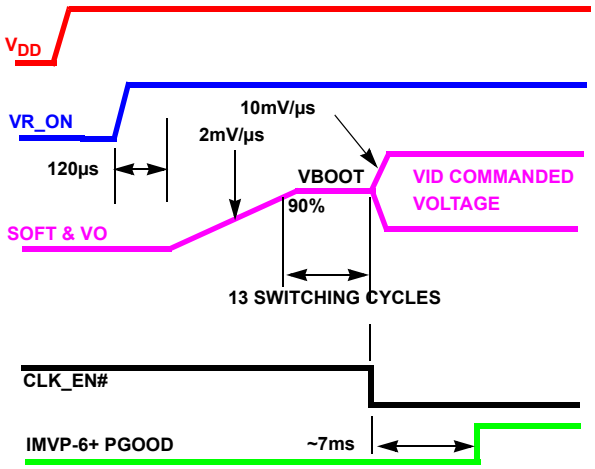

FIGURE 42. SOFT-START WAVEFORMS USING A 20nF SOFT CAPACITOR

Static Operation

A) Voltage Regulation at Zero Load Current

After the start sequence, the output voltage will be regulated to the value set by the VID inputs per Table 1. The entire VID Table is presented in the Intel IMVP-6+™ specification. The ISL6260C will control the no-load output voltage to an accuracy of ±0.5% over the range of 0.75V to 1.5V.

TABLE 1. TRUNCATED VID TABLE FOR INTEL IMVP-6+™ SPECIFICATION

VID6	VID5	VID4	VID3	VID2	VID1	VID0	VOUT
0	0	0	0	0	0	0	1.500V
0	0	0	0	0	0	1	1.4875
0	0	0	0	1	0	1	1.4375
0	0	0	0	1	1	1	1.4125
0	0	0	1	0	0	0	1.4000
0	0	1	0	0	0	1	1.2875
0	0	1	1	0	0	0	1.2000
0	0	1	1	1	0	0	1.1500
0	1	0	1	0	0	0	1.0000
0	1	0	1	0	1	1	0.9625
0	1	1	1	1	0	0	0.7500
1	0	0	0	1	0	0	0.6500
1	0	1	0	0	0	0	0.5000
1	1	0	0	0	0	0	0.300
1	1	0	0	0	0	1	Off
1	1	0	0	0	1	0	Off
...							Off
1	1	1	1	1	1	0	Off
1	1	1	1	1	1	1	Off

A differential amplifier allows voltage sensing for precise voltage regulation at the microprocessor die. The inputs to the amplifier are the VSEN and RTN pins.

B) Load Line or Droop Accomplishment

As the load current increases from zero, the output voltage will drop from the VID table value by an amount proportional to load current to achieve the IMVP-6+ load line. The ISL6260C provides for current to be sensed using resistors in series with the channel inductors as shown in the application circuit of Figure 40 or using the intrinsic series resistance of the inductors as shown in the application circuit of Figure 39. In both cases, signals representing the inductor currents are summed at VSUM which is the non-inverting input to the DROOP amplifier shown in the block diagram of Figure 41. The voltage at the DROOP pin minus the output voltage at VO pin is the total load current multiplied by a gain factor. This value is used as an input to the differential amplifier to achieve the IMVP-6+ load line as well as the input to the overcurrent circuit.

When using inductor DCR current sensing, a single NTC element is used to compensate the positive temperature coefficient of the copper winding thus sustaining the load-line accuracy with reduced cost.

C) Phase Current Balance

In addition to the total current which is used for DROOP and OCP, the individual channel average currents are also monitored by the phase node voltage. Channel current differences are sensed by comparing ISEN1, ISEN2, and ISEN3 voltage. The IBAL circuit will adjust the channel pulse-widths up or down relative to the other channels to cause the voltages presented to the ISEN pins to be equal.

D) Enable and Disable Phases

The ISL6260C controller can be configured for three-, two- or single-channel operation. To disable channel two and/or channel three, its PWM output pin should be tied to +5V and the ISEN pins should be grounded. In three-channel operation, the three channel PWM's are phase shifted by 120°, and in two-channel operation they are phase shifted by 180°.

E) Switching Frequency in CCM/DCM mode

The switching frequency is adjusted by the resistor between the error amplifier output and the VW pin. When ISL6260C is in continuous conduction mode (CCM), the switching frequency may not be as constant as that of a fixed frequency PWM controllers. However, the switching frequency variation will be kept small to maintain the output voltage ripple within SPEC. In general, the switching frequency will be very close to the set value at high input voltage and heavy load conditions.

When DPRSLPVR is high and DPRSTP# is low, the FCCM pin will become low, and discontinuous conduction mode (DCM) operation will be allowed in the ISL6208 gate drive. In DCM, ISL6208 turns off the lower FET after its channel current across zero. As load is further reduced, channel switching frequency will drop, providing optimized efficiency at light loading. FCCM logic low is the signal to enable, or to allow the DCM operation. Only if the inductor current is really cross zero, does the true DCM occur.

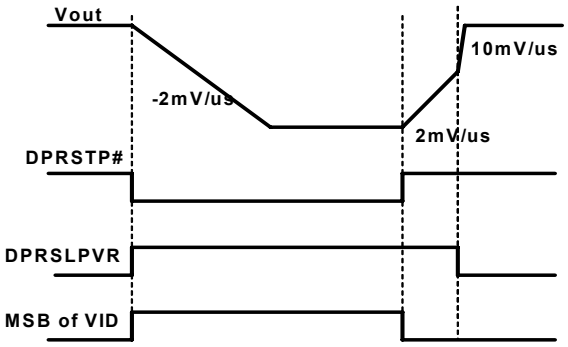

FIGURE 43. DEEPER SLEEP TRANSITION SHOWING DPRSLPVR's EFFECT ON EXIT SLEW RATE

Dynamic Operation

Refer to Figure 43. The ISL6260C responds to changes in VID command voltage by slewing to new voltages with a dV/dt set by the SOFT capacitor and by the state of DPRSLPVR. With CSOFT = 20nF and DPRSLPVR HIGH, the output voltage will move at ±2mV/µs for large changes in voltage. For DPRSLPVR LOW, the large signal dV/dt will be ±10mV/µs. As the output approaches the VID command voltage, the dV/dt rate moderates to prevent overshoot. During Geyserville III transitions where there is one LSB VID step each 5µs, the controller will follow the VID command with its dV/dt rate of ±2.5mV/µs.

Keeping DPRSLPVR HIGH during VID transitions will result in reduced dV/dt slew rate and lesser audio noise. For fastest recovery from Deeper Sleep to Active mode, DPRSLPVR LOW achieves higher dV/dt as required by IMVP-6+ DPRSTP# and DPRSLPVR logic SPEC.

Intersil's R^3 intrinsically has voltage-feed-forward. The output voltage is insensitive to a fast slew input voltage change. Refer to Figure 15 in the "Typical Operating Performance" on page 9 for Input Transient Performance.

The hysteresis window voltage is constructed with a resistor on the Vw pin to the error amplifier outputs. The synthesized inductor current ripple signal compares with the window voltage and generates PWM signal. At load current step up, the switching frequency is increased resulting in a faster response than conventional fixed frequency PWM controllers. As all the phases shares the same hysteretic window voltage, it also ensures excellent dynamic current balance between phases. The individual average phase voltages are monitored and controlled to achieve steady state current balance among the phases with current balance loop.

Modes of Operation Programmed by Logic Signals

The operational modes of ISL6260C are programmed by the control signals of DPRSLPVR, DPRSTP#, and PSI#. ISL6260C responds PSI# signal by adding or dropping PWM2 and adjusting the overcurrent protection level accordingly. For example, if the ISL6260C is initially used as three phase controller, the PSI# signal will add or drop PWM2 and leave PWM1 and PWM3 always in operation. Meanwhile, after PWM2 is dropped, the phase shift between the PWM1 and PWM3 is adjusted from 120° to 180° and the overcurrent and the way-overcurrent protection level will be adjusted to 2/3 of the initial value. If the ISL6260C is initially used as two phase operation, it is suggested that PWM1 and PWM2 pair, not PWM1 and PWM3 pair, should be used such that the PSI# signal will enable or disable PWM2 with PWM1 in operation always. The overcurrent and way-overcurrent protection level in two-to-one phase mode operation will be adjusted as two-to-one as well.

The DCM mode operation is independent of PSI# for ISL6260C. It responds to the DPRSLPVR and DPRSTP#. Table 2 shows the operation modes of ISL6260C with combinations of control logic.

When PSI# is de-asserted low, ISEN2 pin is connected to the ISEN pins of the operational phases internally to keep proper current balance and minimize the inductor current overshoot and undershoot when the disabled phase is enabled again.

TABLE 2. ISL6260C MODE OF OPERATIONS

	DPRSLPVR	DPRSTP#	PSI#	MODE OF OPERATION	CPU MODE
IMVP-6+ Logic	0	1	1	N phase CCM	Active
	0	1	0	N-1 phase CCM	Active
	1	0	1	N phase DCM	Deeper sleep
	1	0	0	N-1 phase DCM	Deeper sleep
Other Logic	0	0	1	N phase CCM	
	0	0	0	N-1 phase CCM	
	1	1	1	N phase CCM	
	1	1	0	N-1phase CCM	

Protection

The ISL6260C provides overcurrent, overvoltage, and undervoltage protection. Overcurrent protection is related to the voltage droop which is determined by the load line requirement. After the load-line is set, the OCSET resistor can be selected to detect overcurrent at any level of droop voltage. For overcurrent less that 2.5x the OCSET level, the overload condition must exist for 120µs in order to trip the OC fault latch. This is shown in Figure 28.

For overload exceeding 2.5 times the OCSET level, the PWM outputs will immediately shut off and PGOOD will go low to maximize protection due to hard short circuit. This protection was referred to as way-overcurrent or fast over current, for short-circuit protections.

In addition, excessive phase unbalance due to gate driver failure will be detected and will shut down the controller. The phase unbalance is detected by the voltage on the ISEN pin. If the ISEN pin voltage difference is greater than 9mV for 1ms, the controller will latch off.

Undervoltage protection is independent of the overcurrent limit. If the output voltage is less than the VID set value by 300mV or more, a fault will latch after 1ms in that condition. The PWM outputs will turn off and PGOOD will go low. This is shown in Figure 27. Note that most practical core voltage regulators will have the overcurrent set to trip before the -300mV undervoltage limit.

There are two levels of overvoltage protection with different response. The first level of overvoltage protection is referred to as PGOOD overvoltage protection. Basically, for output voltage exceeding the set value by +200mV for 1ms, a fault will be declared with PGOOD latched low.

All of the above faults have the same action taken: PGOOD is latched low and the upper and lower power FETs are turned off so that inductor current will decay through the FET body diodes. This condition can be reset by bringing VR_ON low or by bringing V_{DD} below POR threshold. When these inputs are returned to their high operating levels, a soft-start will occur.

The second level of overvoltage protection behaves differently. If the output exceeds 1.7V, an OV fault is immediately declared, PGOOD is latched low and the low-side FETs are turned on. The low-side FETs will remain on until the output voltage is pulled down below 0.85V at which time all FETs are turned off. If the output again rises above 1.7V, the process is repeated. This affords the maximum amount of protection against a shorted high-side FET while preventing output ringing below ground. The 1.7V OVP can not be reset with VR_ON, but requires that V_{DD} be lowered to reset. The 1.7V OV detector is active at all times when the controller is enabled including after one of the other faults occurs. This ensures the processor is protected against high-side FET leakage while the FETs are commanded off.

TABLE 3. SUMMARY OF THE FAULT PROTECTION AND RESET OPERATIONS OF ISL6260C

	FAULT DURATION PRIOR TO PROTECTION	PROTECTION ACTIONS	FAULT RESET
Overcurrent	120µs	PWMs tri-state, PGOOD latched low	VR_ON toggle or VDD toggle
Way-Overcurren (2.5X OC)	<2µs	PWMs tri-state, PGOOD latched low	VR_ON toggle or VDD toggle
Overvoltage 1.7V	Immediately	Low side MOSFET on until Vcore <0.85V, then PWM tri-state, PGOOD latched low.	VDD toggle
Overvoltage +200mV	1ms	PWMs tri-state, PGOOD latched low	VR_ON toggle or VDD toggle
Undervoltage -300mV	1ms	PWMs tri-state, PGOOD latched low	VR_ON toggle or VDD toggle
Phase Current Unbalance	1ms	PWMs tri-state, PGOOD latched low	VR_ON toggle or VDD toggle
Over Temperature	Immediately	VR_TT# goes low	N/A

The ISL6260C has a thermal throttling feature. If the voltage on the NTC pin goes below the 1.18V OT threshold, the VR_TT# pin is pulled low indicating the need for thermal throttling to the system oversight processor. No other action is taken within the ISL6260C in response to NTC pin voltage.

Fault protection is summarized in Table 3.

Power Monitor

The power monitor signal is an analog output. Its magnitude is proportional to the product of $V_{CCSENSE}$ and the voltage difference between V_{DROOP} and V_O, which is the programmed load line impedance (2.1mΩ) multiplied by load current. The output voltage of the PMON pin is given by:

$V_{PMON} = V_{CCSENSE}*(V_{DROOP}-V_O)*17.5$ (Volt)

The power consumed by the CPU can be calculated by:

$Pcpu = V_{PMON}/(17.5*0.0021)$ (Watt)

where the 0.0021 is the load line impedance.The power monitor load regulation is about 7Ω. Basically, within its sourcing/sinking current capability range, when the power monitor loading changes 1mA, the output of the power monitor will change 7mV. The 7Ω impedance is associated with the layout and packaging resistance of PMON pin inside the IC. Compared to the load resistance on the power monitor pin in practical applications, 7Ω output impedance contributes no significance of error.

Component Selection and Application

Soft-Start and Mode Change Slew Rates

The ISL6260C uses 2 slew rates for various modes of operation. The first is a slow slew rate, used to reduce inrush current on start-up. It is also used to reduce audible noise when entering or exiting Deeper Sleep Mode. A faster slew rate is used to exit out of Deeper Sleep and to increase system performance by achieving active mode regulation more quickly. Note that the SOFT cap current is bidirectional and is flowing into the SOFT capacitor when the output voltage is commanded to rise, and out of the SOFT capacitor when the output voltage is commanded to fall.

The two slew rates are determined by the currents into the SOFT pin. As can be seen in Figure 44, the SOFT pin has a capacitance to ground. Also, the SOFT pin is the input to the error amplifier and is, therefore, the commanded system voltage. Depending on the state of the system, i.e. Start-Up or Active mode, and the state of the DPRSLPVR pin, one of the two currents shown in Figure 44 will be used to charge or discharge this capacitor, thereby controlling the slew rate of the commanded voltage. These currents can be found under the Soft Current section of the “Electrical Specifications” table on page 4.

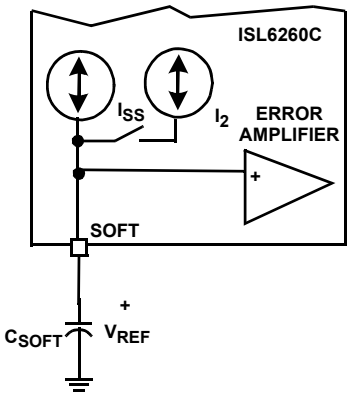

FIGURE 44. SOFT PIN CURRENT SOURCES FOR FAST AND SLOW SLEW RATES

The first current, labeled I_{SS}, is given in the Specification Table as 42µA. This current is used during Soft-Start. The second current, I_2 sums with I_{SS} to get the large current labeled I_{GV} in the “Electrical Specifications” table on page 4. This total current is typically 205µA with a minimum of 180µA.

The IMVP-6+™ specification reveals the critical timing associated with regulating the output voltage. The symbol, Slewrate, as given in the IMVP-6+™ specification, will

determine the choice of the SOFT capacitor, C_{SOFT}, by Equation 1:

$$C_{SOFT} = \frac{I_{GV}}{SLEWRATE} \quad \text{(EQ. 1)}$$

Using a SLEWRATE of 10mV/µs, and the typical I_{GV} value, given in the Table Electrical Specifications on page 4 of 205µA, C_{SOFT} is:

$$C_{SOFT} = \frac{205\mu A}{\frac{10mV}{1\mu s}} = 0.0205\mu F \quad \text{(EQ. 2)}$$

A choice of 0.015µF would guarantee a SLEWRATE of 10mV/µs is met for minimum I_{GV} value, given in the "Electrical Specifications" table on page 4.

Now this choice of C_{SOFT} will then control the start-up slewrate as well. One should expect the output voltage to slew to the Boot value of 1.2V at a rate given by Equation 3:

$$\frac{dV}{dt} = \frac{I_{SS}}{C_{SOFT}} = \frac{42\mu A}{0.015\mu F} = 2.8\frac{mV}{\mu s} \quad \text{(EQ. 3)}$$

Generally, when output voltage is approaching its steady state, its dv/dt will slow down to prevent overshoot. In order to compensate the slow-down effect, faster initial dv/dt slew rates can be used with small soft capacitors such as 10nF to achieve the desired overall dv/dt in the allocated time interval.

Selecting R_{BIAS}

To properly bias the ISL6260C, a reference current is established by placing a 147kΩ, 1% tolerance resistor from the R_{BIAS} pin to ground. This will provide a highly accurate, 10µA current source from which OCSET reference current can be derived.

Care should be taken in layout that the resistor is placed very close to the R_{BIAS} pin and that a good quality signal ground is connected to the opposite side of the R_{BIAS} resistor. Do not connect any other components to this pin. Capacitance on this pin would create instabilities and should be avoided.

Start-up Operation - CLK_EN# and PGOOD

The ISL6260C provides a 3.3V logic output pin for CLK_EN#. The 3V3 pin allows for a system 3.3V source to be connected to separated circuitry inside the ISL6260C, solely devoted to the CLK_EN# function. The output is a 3.3V CMOS signal with 4mA of source and sinking capability. This implementation removes the need for an external pull-up resistor on this pin, and due to the normal level of this signal being a low, removes the leakage path from the 3.3V supply to ground through the pull-up resistor. This reduces 3.3V supply current, that would occur under normal operation with a pull-up resistor, and prolongs battery life. The 3.3V supply should be decoupled to digital ground, not to analog ground for noise immunity.

As mentioned in the "Theory of Operation" on page 17 of this datasheet, CLK_EN# is logic level high at start-up. When the output voltage reaches 90% of Boot voltage, a counter is enabled, it counts 13 switching cycles, about 43µs for 300kHz operation, then CLK_EN# goes low. This in turn triggers an internal timer for the IMVP-6+_PWRGD signal. This timer allows IMVP-6+_PWRGD to go high approximately 7ms after CLK_EN# goes low.

Static Mode of Operation - Processor Die Sensing

Die sensing allows the Voltage Regulator to compensate for various resistive drops in the power path and insure that the voltage seen at the CPU die is the correct level independent of load current.

The VSEN and RTN pins of the ISL626C are connected to Kelvin sense leads at the die of the processor through the processor socket. These signal names are V_{CC_SENSE} and V_{CC_SENSE} respectively. This allows the Voltage Regulator to tightly control the processor voltage at the die, independent of layout inconsistencies and drops. This Kelvin sense technique provides for extremely tight load line regulation.

These traces should be laid out as noise sensitive traces. For optimum load line regulation performance, the traces connecting these two pins to the Kelvin sense leads of the processor must be laid out in parallel and away from rapidly rising voltage nodes (switching nodes) and other noisy traces. To achieve optimum performance, place common mode and differential mode RC filters to analog ground on VSEN and RTN as shown in Figure 46. However, the filter resistors should be in order of 10Ω so that they do not interact with the 50kΩ input resistance of the differential amplifier.

Due to the fact that the voltage feedback to the switching regulator is sensed at the processor die, there exists the potential of an overvoltage due to an open circuit feedback signal, should the regulator be operated without the processor installed. Due to this fact, we recommend the use of the Ropn1 and Ropn2 connected to V_{OUT} and ground as shown in Figure 46. These resistors will provide voltage feedback in the event that the system is powered up without a processor installed. These resistors are typically 100Ω.

Setting the Switching Frequency - FSET

The R_3 modulator scheme is not a fixed frequency PWM architecture. The switching frequency can increase during the application of a load to improve transient performance. However, it also varies slightly due changes in input and output voltage and output current, but this variation is normally less than 10% in continuous conduction mode.

Refer to Figure 39. A resistor connected between the VW and COMP pins of the ISL6260C adjusts the switching window, and therefore adjusts the switching frequency. The Rfset resistor that sets up the switching frequency of the

converter operating in CCM can be determined using the following relationship, where Rfset is in kΩ and the switching period is in μs.

$$\text{Rfset}(k\Omega) = (\text{Period}(\mu s) - 0.29) \times 2.33 \quad \text{(EQ. 4)}$$

In discontinuous conduction mode, (DCM), the ISL6260C runs in period stretching mode. It should be noted that the switching frequency in the Electrical Specification Table is tested with the error amplifier output or Comp pin voltage at 2V. When Comp pin voltage is lower, the switching frequency will not be at the tested value but can still maintain the output voltage ripple within spec.

Voltage Regulator Thermal Throttling

Intel™ IMVP-6+™ technology supports thermal throttling of the processor to prevent catastrophic thermal damage to the voltage regulator. The ISL6260C feature a thermal monitor which senses the voltage change across an externally placed negative temperature coefficient (NTC) thermistor, see Figure 45. Proper selection and placement of the NTC thermistor allows for detection of a designated temperature rise by the system.

Figure 45 shows the thermal throttling feature with hysteresis. At low temperature, SW1 is on and SW2 connects to the 1.20V side. The total current going from NTC pin is 60μA. The voltage on NTC pin is higher than threshold voltage of 1.20V and the comparator output is low. VR_TT# is pulling up high by the external resistor.

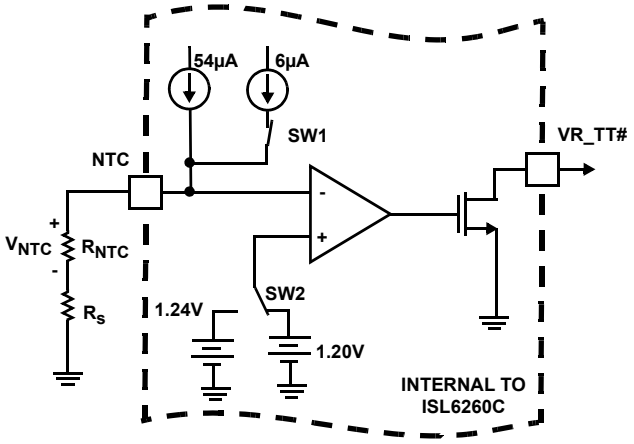

FIGURE 45. CIRCUITRY ASSOCIATED WITH THE THERMAL THROTTLING FEATURE OF THE ISL6260C

When temperature increases, the NTC thermistor resistance on NTC pin decreases. The voltage on NTC pin decreases to a level lower than 1.20V. The comparator changes polarity and turns SW1 off and throws SW2 to 1.24V. This pulls VR_TT# low and sends the signal to start thermal throttle. There is a 6μA current reduction on NTC pin and 40mV voltage increase on threshold voltage of the comparator in this state. The VR_TT# signal will be used to change the CPU operation and decrease the power consumption. When the temperature goes down, the NTC thermistor voltage will eventually go up. If NTC voltage increases to 1.24V, the comparator will then be able to flip back. The external resistance difference in these two conditions is:

$$\frac{1.24V}{54\mu A} - \frac{1.20V}{60\mu A} = 2.96k \quad \text{(EQ. 5)}$$

Therefore, proper NTC thermistor has to be chosen such that 2.96k resistor change will be corresponding to required temperature hysteresis. Regular external resistor may need to be in series with NTC resistors to meet the threshold voltage values.

The following is an example.

For Panasonic NTC thermistor with B = 4700, its resistance will drop to 0.03322 of its nominal at +105°C, and drop to 0.03956 of its nominal at +100°C. If the requirement for the temperature hysteresis is (+105°C to +100°C), the required resistance of NTC will be:

$$\frac{2.96k\Omega}{(0.03956 - 0.03322)} = 467k\Omega \quad \text{(EQ. 6)}$$

Therefore a larger value thermistor, such as 470k NTC should be used.

At 105°C, 470k NTC resistance becomes (0.03322*470k) = 15.6k. With 60μA on NTC pin, the voltage is only (15.6k*60μA) = 0.937V. This value is much lower than the threshold voltage of 1.20V. Therefore, a resistor is needed to be in series with the NTC. The required resistance can be calculated by:

$$\frac{1.20V}{60\mu A} - 15.6k\Omega = 4.4k\Omega \quad \text{(EQ. 7)}$$

4.42k is a standard resistor value. Therefore, the NTC branch should have a 470k NTC and 4.42k resistor in series. The part number for the NTC thermistor is ERTJ0EV474J. It is a 0402 package. NTC thermistor will be placed in the hot spot of the board.

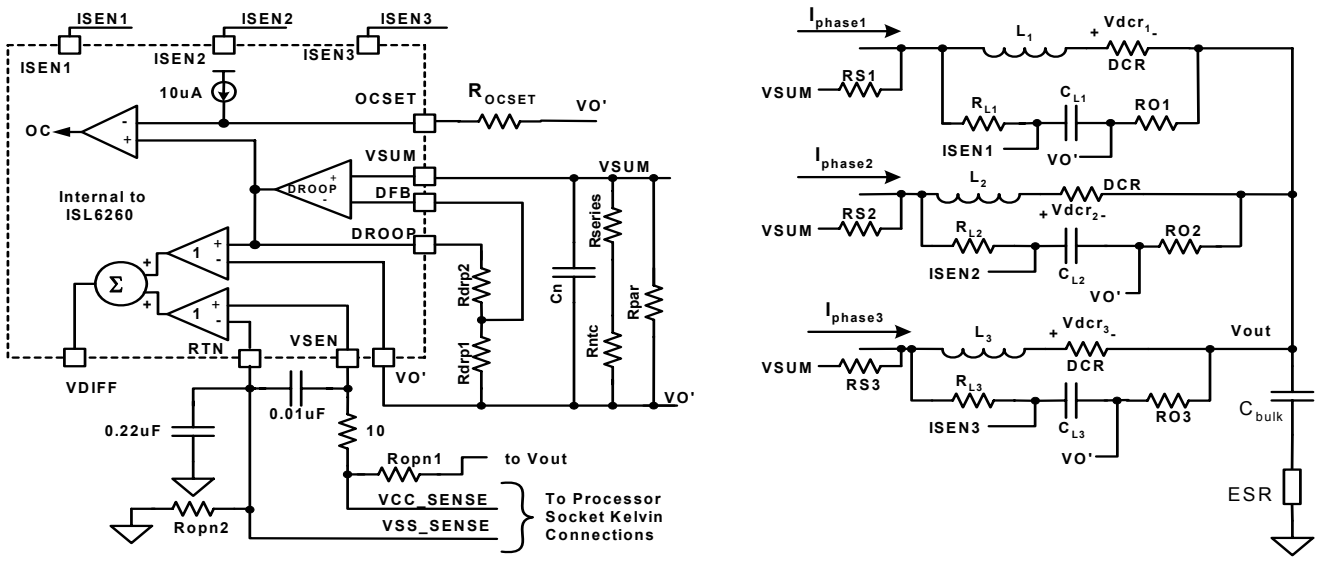

FIGURE 46. EQUIVALENT MODEL FOR DROOP AND DIE SENSING USING DCR SENSING

Static Mode of Operation - Static Droop using DCR Sensing

As previously mentioned, the ISL6260C has an internal differential amplifier which provides for extremely accurate voltage regulation at the die of the processor. The load line regulation is also very accurate, and the process of selecting the components for the appropriate load line droop is explained here.

For DCR sensing, the process of compensation for DCR resistance variation to achieve the desired load line droop has several steps and is somewhat iterative.

In Figure 46 we show a 3 phase solution using DCR sensing. There are two resistors around the inductor of each phase. These are labeled RS and RO. These resistors are used to sense the DC voltage drop across each inductor. Each inductor will have a certain level of DC current flowing through it, this current when multiplied by the DCR of the inductor creates a small DC level of voltage. When this voltage is summed with the other channels DC voltages, the total DC load current can be derived.

RO is typically 5Ω to 10Ω. This resistor is used to tie the outputs of all channels together and thus create a summed average of the local CORE voltage output. RS is determined through an understanding of both the DC and transient load currents. This value will be covered in the next section.

However, it is important to keep in mind that the output of each of these RS resistors are tied together to create the VSUM voltage node. With both the outputs of RO and RS tied together, the simplified model for the droop circuit can be derived. This is presented in Figure 47.

Figure 47 shows the simplified model of the droop circuitry. Essentially one resistor can replace the RO resistors of each phase and one RS resistor can replace the RS resistors of each phase. The total DCR drop due to load current can be replaced by a DC source, the value of which is given by Equation 8.

$$Vdcr_{EQV} = \frac{I_{OUT} \times DCR}{N} \qquad \text{(EQ. 8)}$$

where N is the number of channels designed for active operation. Another simplification was done by reducing the NTC network comprised of Rntc, Rseries and Rparallel, given in Figure 46, to a single resistor given as Rn as shown in Figure 47.

The first step in droop load line compensation is to adjust Rn, RO_{EQV} and RS_{EQV} such that sufficient droop voltage exists even at light loads between the VSUM and VO' nodes. We recognize that these components form a voltage divider. As a rule of thumb we start with the voltage drop across the Rn network, VN, to be 0.57 x Vdcr. This ratio provides for a fairly reasonable amount of light load signal from which to arrive at droop.

First we calculate the equivalent NTC network resistance, Rn. Typical values that provide good performance are, Rseries = 3.57k_1%, Rpar = 4.53k_1% and Rntc = 10kΩ NTC, ERT-J1VR103J from Panasonic. Rn is then given by Equation 9.

$$Rn = \frac{(Rseries + Rntc) \times Rpar}{Rseries + Rntc + Rpar} = 3.4k\Omega \qquad \text{(EQ. 9)}$$

In our second step we calculate the series resistance from each phase to the Vsum node, labeled RS1, RS2 and RS3 in Figure 46.

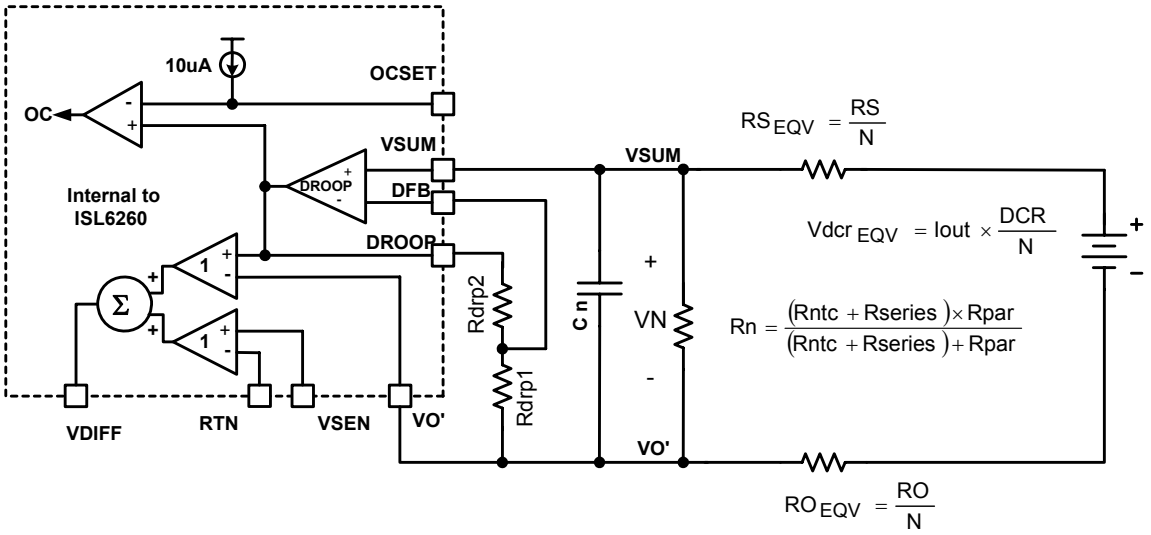

FIGURE 47. EQUIVALENT MODEL FOR DROOP AND DIE SENSING USING DCR SENSING

We do this using the assumption that we desire approximately a 0.57 gain from the DCR voltage, Vdcr, to the Rn network. We call this gain, G1.

$$G1 = 0.57 \quad \text{(EQ. 10)}$$

After simplification, then RS_{EQV} is given by Equation 11:

$$RS_{EQV} = \left(\frac{1}{G1} - 1\right)Rn = 2.56k\Omega \quad \text{(EQ. 11)}$$

The individual resistors from each phase to the VSUM node, labeled RS1, RS2 and RS3 in Figure 46, are then given by Equation 12, where N is 3, for the number of channels in active operation.

$$RS = N \times RS_{EQV} = 7.69k\Omega \quad \text{(EQ. 12)}$$

Choosing RS = 7.68k_1% is a good choice. Once we know the attenuation of the RS and RN network, we can then determine the Droop amplifier Gain required to achieve the load line. Setting Rdrp1 = 1k_1%, then Rdrp2 is can be found using Equation 13.

$$Rdrp2 = \left(\frac{N \times Rdroop}{DCR \times G1} - 1\right) \times Rdrp1 \quad \text{(EQ. 13)}$$

Setting N = 3 for 3 channel operation, Droop Impedance (Rdroop) = 0.0021 (V/A) as per the Intel IMVP-6+ specification, DCR = 0.0012Ω typical, Rdrp1 = 1kΩ and the attenuation gain (G1) = 0.57, Rdrp2 is then:

$$Rdrp2 = \left(\frac{3 \times 0.0021}{0.0012 \times 0.57} - 1\right) \times 1K = 8.21k\Omega \quad \text{(EQ. 14)}$$

Rdrp2 is selected to be a 8.25k_1% resistor. Note, we choose to ignore the RO resistors because they do not add significant error.

These values are extremely sensitive to layout and coupling factor of the NTC to the inductor. As only one NTC is required in this application, this NTC should be placed as close to the Channel 1 inductor as possible. And very importantly, the PCB traces sensing the inductor voltage should be go directly to the inductor pads.

Once the board has been laid out, some adjustments may be required to adjust the full load droop voltage. This can be accomplished by allowing the system to achieve thermal equilibrium at full load, and then adjusting Rdrp2 to obtain the appropriate load line slope.

To see whether the NTC has compensated the temperature change of the DCR, the user can apply full load current and wait for the thermal steady state and see how much the output voltage will deviate from the initial voltage reading. A good NTC thermistor compensation can limit the output voltage drift to 2mV. If the output voltage is decreasing with temperature increase, that ratio between the NTC thermistor value and the rest of the resistor divider network has to be increased. Users should use the ISL6260C evaluation board component values and follow the evaluation board layout of NTC as much as possible to minimize engineering time.

The 2.1mV/A load line should be adjusted by Rdrp2 based on maximum current steps, not based on small current steps. Basically, if the max current is 40A, the required droop voltage is 84mV with 2.1mΩ load line impedance. The user should have 40A load current on the converter and look for 84mV droop. If the droop voltage is less than 84mV, for example, 80mV. The new value will be calculated by Equation 15:

$$Rdrp_2_new = \frac{84\ mV}{80\ mV}(Rdrp_1 + Rdrp_2) - Rdrp_1 \quad \text{(EQ. 15)}$$

For the best accuracy, the equivalent resistance on the DFB and VSUM pins should be identical so that the bias current of the droop amplifier does not cause an offset voltage. In the example above, the resistance on the DFB pin is Rdrp1 in parallel with Rdrop2, that is, 1k in parallel with 8.21k or 890Ω. The resistance on the VSUM pin is Rn in parallel with RS_{EQV} or 3.4k in parallel with 2.56k or 1460Ω. The mismatch in the effective resistances is 1460 - 890 = 570Ω. To reduce the mismatch, multiply both Rdrp1 and Rdrp2 by the appropriate factor. The appropriate factor in the example is 1460/890 = 1.64.

Dynamic Mode of Operation - Dynamic Droop using DCR Sensing

Droop is very important for load transient performance. If the system is not compensated correctly, the output voltage could sag excessively upon load application and potentially create a system failure. The output voltage could also take a long period of time to settle to its final value.

The L/DCR time constant of the inductor must be matched to the Rn*Cn time constant as shown in Equation 16:

$$\frac{L}{DCR} = \left(\frac{Rn \times RS_{EQV}}{Rn + RS_{EQV}}\right) \times Cn \quad \text{(EQ. 16)}$$

Solving for Cn we now have Equation 17:

$$Cn = \frac{\frac{L}{DCR}}{\left(\frac{Rn \times RS_{EQV}}{Rn + RS_{EQV}}\right)} \quad \text{(EQ. 17)}$$

Note, RO was neglected. As long as the inductor time constant matches the droop circuit RC time constants as given above, the transient performance will be optimum. The selection of Cn may require a slight adjustment to correct for layout inconsistencies and component tolerance. For the example of L = 0.5µH, Cn is calculated in Equation 18.

$$Cn = \frac{\frac{0.5\mu H}{0.0012}}{\left(\frac{3.4k\Omega \times 2.56k\Omega}{3.4k\Omega + 2.56k\Omega}\right)} = 28.5nF \quad \text{(EQ. 18)}$$

The value of this capacitor is selected to be 27nF. As the inductors tend to have 20% to 30% tolerances, this cap generally will be tuned on the board by examining the transient voltage. If the output voltage transient has an initial dip, lower than the voltage required by the load line, and is slowly increasing back to the steady state, the cap should be increased and vice versa. It is better to have the cap value a little bigger to cover the tolerance of the inductor to prevent the output voltage from going lower than the spec. This cap needs to be a high grade cap like X7R with low tolerance. There is another consideration in order to achieve better time constant match mentioned above. The NPO/COG (class-I) capacitors have only 5% tolerance and a very good thermal characteristics. But those caps are only available in small capacitance values. In order to use such capacitors, the resistors and thermistors surrounding the droop voltage sensing and droop amplifier has to be resized up to 10x to reduce the capacitance by 10x. But attention has to be paid in balancing the impedance of droop amplifier in this case.

Dynamic Mode of Operation - Compensation Parameters

Considering the voltage regulator as a black box with a voltage source controlled by VID and a series impedance, in order to achieve the 2.1mV/A load line, the series impedance inside the black box needs to be 2.1mΩ. The compensation design has to ensure the output impedance of the converter be lower than 2.1mΩ. There is a mathematical calculation file available to the user. The power stage parameters such as L and Cs are needed as the input to calculate the compensation component values. Attention has be paid to the input resistor to the FB pin. Too high of a resistor will cause an error to the output voltage regulation because of bias current flowing in the FB pin. It is better to keep this resistor below 3k when using this file.

Static Mode of Operation - Current Balance using DCR or Discrete Resistor Current Sensing

Current Balance is achieved in the ISL6260C through the matching of the voltages present on the ISEN pins. The ISL6260C adjusts the duty cycles of each phase to maintain equal potentials on the ISEN pins. RL and CL around each inductor, or around each discrete current resistor, are used to create a rather large time constant such that the ISEN voltages have minimal ripple voltage and represent the DC current flowing through each channel's inductor. For optimum performance, RL is chosen to be 10kΩ and CL is selected to be 0.22µF. When discrete resistor sensing is used, a capacitor of 10nF should be placed in parallel with RL to properly compensate the current balance circuit.

ISL6260C uses RC filter to sense the average voltage on phase node and forces the average voltage on the phase node to be equal for current balance. Even though the ISL6260C forces the ISEN voltages to be almost equal, the inductor currents will not be exactly the same. Take DCR current sensing as example, two errors have to be added to find the total current imbalance. 1) Mismatch of DCR: If the DCR has a 5% tolerance, then the resistors could mismatch by 10% worst case. If each phase is carrying 20A then the phase currents mismatch by 20A*10% = 2A. 2) Mismatch of phase voltages/offset voltage of ISEN pins. The phase voltages are within 2mV of each other by current balance circuit. The error current that results is given by 2mV/DCR. If DCR = 1mΩ then the error is 2A.

In the above example, the two errors add to 4A. For a two phase DC/DC, the currents would be 22A in one phase and 18A in the other phase. In the above analysis, the current

balance can be calculated with 2A/20A = 10%. This is the worst case calculation, for example, the actual tolerance of two 10% DCRs is 10%*√(2) = 7%.

There are provisions to correct the current imbalance due to layout or to purposely divert current to certain phase for better thermal management. Customer can put a resistor in parallel with the current sensing capacitor on the phase of interest in order to purposely increase the current in that phase. It is highly recommended to use symmetrical layout in order to achieve natural current balance.

In the case the PC board trace resistance from the inductor to the microprocessor are not the same on all three phases, the current will not be balanced. On the phases that have too much trace resistance a resistor can be added in parallel with the ISEN capacitor that will correct for the poor layout.

An estimate of the value of the resistor is as shown in Equation 19:

$$Rtweak = \frac{Risen*[2*Rdcr - Rtrace - Rmin)]}{[2((Rtrace) - Rmin)]} \quad \text{(EQ. 19)}$$

where Risen is the resistance from the phase node to the ISEN pin; usually 10kΩ. Rdcr is the DCR resistance of the inductor. Rtrace is the trace resistance from the inductor to the microprocessor on the phase that needs to be tweaked. It should be measured with a good microΩ meter. Rmin is the trace resistance from the inductor to the microproccessor on the phase with the least resistance.

For example, if the PC board trace on one phase is 0.5mΩ and on another trace is 0.3mΩ; and if the DCR is 1.2mΩ; then the tweaking resistor is as shown in Equation 20:

$$Rtweak = \frac{10k\Omega*[2*1.2 - (0.5 - 0.3)]}{[2*(0.5 - 0.3)]} = 55k\Omega \quad \text{(EQ. 20)}$$

For extremely unsymmetrical layout causing phase current unbalance, ISL6260C applications schematics can be modified to correct the problem.

Droop using Discrete Resistor Sensing - Static/ Dynamic Mode of Operation

When choosing current sense resistor, not only the tolerance of the resistance is important, but also the TCR. And its combined tolerance at a wide temperature range should be calculated.

Figure 48 shows the equivalent circuit of a discrete current sense approach. Figure 40 shows the simplified schematic of this approach.

For discrete resistor current sensing circuit, the droop circuit parameters can be solved the same way as the DCR sensing approach with a few slight modifications.

First, there is no NTC required for thermal compensation, therefore, the Rn resistor network in the previous section is not required. Secondly, there is no time constant matching required, therefore, the Cn component is not needed to match the L/DCR time constant, but this component does indeed provide noise immunity, especially to noise voltage caused by the ESL of the current sensing resistors. A 47pF capacitor can be used for such purposes.

The Rs values in the previous section, Rs = 7.68k_1% are sufficient for this approach.

Now, the input to the Droop amplifier is the Vrsense voltage. This voltage is given by Equation 21:

$$Vrsense = \frac{Rsense}{N} \times I_{OUT} \quad \text{(EQ. 21)}$$

The gain of the Droop amplifier, G2, must be adjusted equal to the load line impedance. We use Equation 22:

$$G2 = \frac{Rdroop}{Rsense} \times N \quad \text{(EQ. 22)}$$

Assuming N = 3, Rdroop = 0.0021(V/A) as per the Intel IMVP-6+ specification, Rsense = 0.001Ω, we obtain G2 = 6.3.

The values of Rdrp1 and Rdrp2 are selected to satisfy two requirements. First, the ratio of Rdrp2 and Rdrp1 determine the gain G2 = (Rdrp2/Rdrp1)+1. Second, the parallel combination of Rdrp1 and Rdrp2 should equal the parallel combination of the Rs resistors. Combining these requirements gives:

Rdrp1 = G2/(G2-1) * Rs/N

Rdrp2 = (G2-1) * Rdrp1

In the example above, Rs = 7.68k, N = 3, and G2 = 6.3 so Rdrp 3k and Rdrp2 is 15.8kΩ.

These values are extremely sensitive to layout. Once the board has been laid out, some tweaking may be required to adjust the full load Droop. This is fairly easy and can be accomplished by allowing the system to achieve thermal equilibrium at full load, and then adjusting Rdrp2 to obtain the desired Droop value.

Power Monitor

The power monitor signal tracks the inductor current. Due to the dynamic operation of the CPU, the inductor current is pulsating and the power monitor signal needs to be filtered. If the RC filter is followed by an A/D converter, the input impedance of the A/D converter needs to be much larger than the resistor used for the RC filter. Otherwise, the input impedance of the A/D converter and the RC filter resistor will construct a resistor divider causing the A/D converter reading incorrect information. It is desirable to choose a small RC filter resistor in order to reduce the resistor divider effect. The ISL6260C comes with a very strong current sinking capability, users can use kΩ resistors for the RC filter. Some A/D converters might have 100kΩ input impedance, 1kΩ resistor will cause 1% error. As shown in

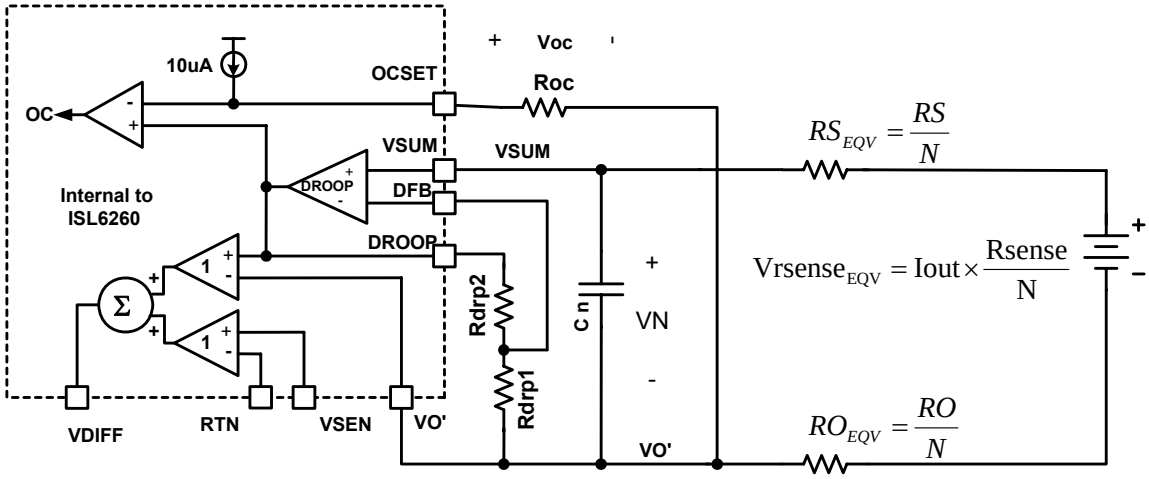

FIGURE 48. EQUIVALENT MODEL FOR DROOP AND DIE SENSING USING DISCRETE RESISTOR SENSING

Figure 36, when the CPU is at 2.5A load, PMON can still sink 0.6mA current. This allows the RC filter capacitor to discharge when the CPU is at low current, thus providing correct average power information on the capacitor.

Fault Protection - Overcurrent Fault Setting

As previously described, the overcurrent protection of the ISL6260C is related to the Droop voltage. Previously we have calculated that the Droop Voltage = ILoad * Rdroop, where Rdroop is the load line slope specified as 0.0021 (V/A) in the Intel IMVP-6+ specification. Knowing this relationship, the overcurrent protection threshold can be set up as a voltage droop level. Knowing this voltage droop level, one can program in the appropriate drop across the Roc resistor. This voltage drop will be referred to as Voc. Once the droop voltage is greater than Voc, the PWM drives will turn off and PGOOD will go low.

The selection of Roc is given below in Equation 23. Assuming we desire an overcurrent trip level, Ioc, of 55A, and knowing from the Intel Specification that the load line slope, Rdroop is 0.0021 (V/A), we can then calculate for Roc as shown in Equation 23.

$$Roc = \frac{Ioc \times Rdroop}{10\mu A} = \frac{55 \times 0.0021}{10 \times 10^{-6}} = 11.5k\Omega \qquad \text{(EQ. 23)}$$

Note, if the droop load line slope is not -0.0021 (V/A) in the application, the overcurrent setpoint will differ from predicted.

A capacitor may be added in parallel with Roc to improve noise rejection but the Roc*capacitor time constant cannot exceed 20µs. Do not remove Roc if overcurrent protection is not desired. The maximum Roc is 30k.

All Intersil U.S. products are manufactured, assembled and tested utilizing ISO9000 quality systems.
Intersil Corporation's quality certifications can be viewed at www.intersil.com/design/quality

Intersil products are sold by description only. Intersil Corporation reserves the right to make changes in circuit design, software and/or specifications at any time without notice. Accordingly, the reader is cautioned to verify that data sheets are current before placing orders. Information furnished by Intersil is believed to be accurate and reliable. However, no responsibility is assumed by Intersil or its subsidiaries for its use; nor for any infringements of patents or other rights of third parties which may result from its use. No license is granted by implication or otherwise under any patent or patent rights of Intersil or its subsidiaries.

For information regarding Intersil Corporation and its products, see www.intersil.com

Package Outline Drawing

L40.6x6

40 LEAD QUAD FLAT NO-LEAD PLASTIC PACKAGE
Rev 3, 10/06

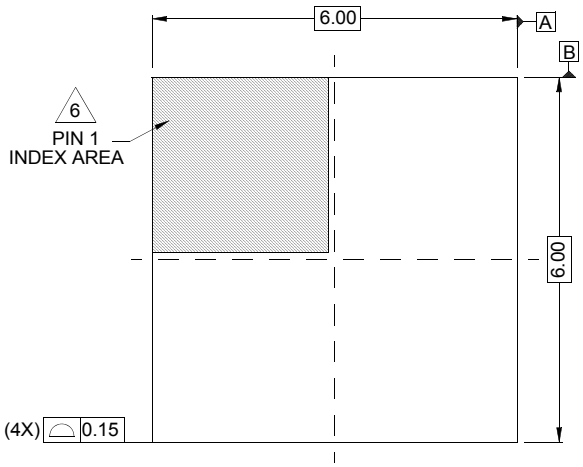

TOP VIEW

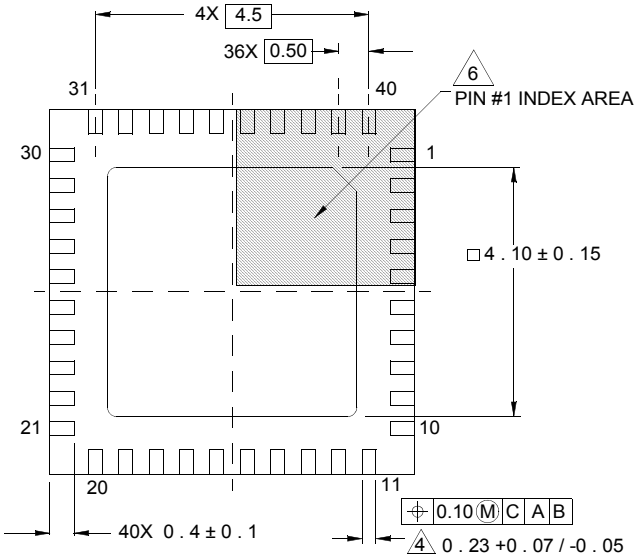

BOTTOM VIEW

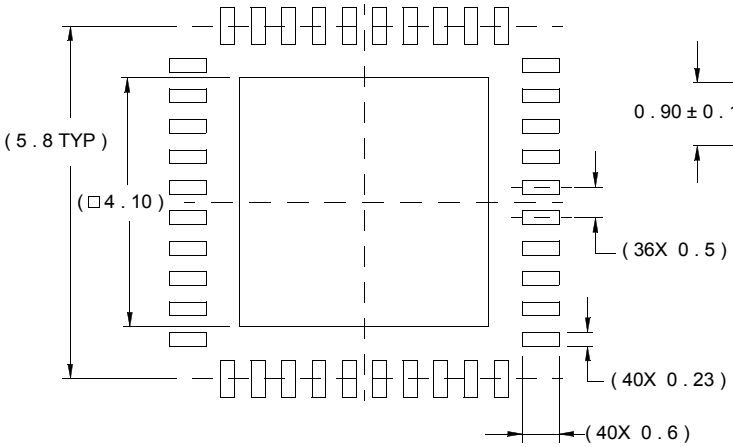

TYPICAL RECOMMENDED LAND PATTERN

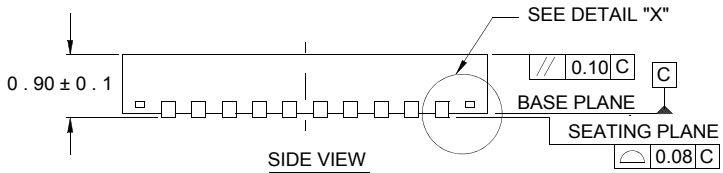

SIDE VIEW

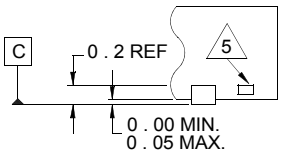

DETAIL "X"

NOTES:

1. Dimensions are in millimeters.
   Dimensions in ( ) for Reference Only.
2. Dimensioning and tolerancing conform to AMSE Y14.5m-1994.
3. Unless otherwise specified, tolerance : Decimal ± 0.05
4. Dimension b applies to the metallized terminal and is measured between 0.15mm and 0.30mm from the terminal tip.
5. Tiebar shown (if present) is a non-functional feature.
6. The configuration of the pin #1 identifier is optional, but must be located within the zone indicated. The pin #1 indentifier may be either a mold or mark feature.