[illegible]

- [illegible]
- [illegible] 2000 [illegible] -883, [illegible] 3015; [illegible] B [illegible] (= 100 [illegible], [illegible] = 1500 Ω)
- [illegible] 200 [illegible] (TPS3823/4/5/8) [illegible] 25 [illegible] (TPS3820)
- [illegible] (TPS3820/3/5/8)
- [illegible] (TPS3820/3/4/5), [illegible] (TPS3824) [illegible] (TPS3828)
- [illegible] 2.5 V, 3 V, 3.3 V, 5 V
- [illegible] (TPS3820/3/4/8)
- [illegible] 15 µA ([illegible])
- [illegible] 23-5 [illegible]

[illegible]

- [illegible]
- [illegible]
- [illegible]
- [illegible]
- [illegible]
- [illegible]

TPS3820, TPS3823, TPS3828 . . . DBV PACKAGE
(TOP VIEW)

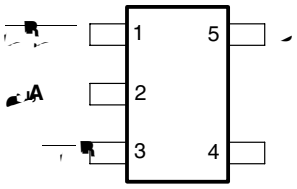

[illegible]

The TPS382x family of supervisors provides circuit initialization and timing supervision, primarily for DSP and processor-based systems.

[illegible]

Supply voltage, V_{DD} (see Note 1) . . . . . 6 V
RESET, $\overline{\text{RESET}}$, $\overline{\text{MR}}$, WDI (see Note 1) . . . . . –0.3 V to (V_{DD} + 0.3 V)
Maximum low output current, I_{OL} . . . . . 5 mA
Maximum high output current, I_{OH} . . . . . –5 mA
Input clamp current range, I_{IK} (V_I < 0 or V_I > V_{DD}) . . . . . ±10 mA
Output clamp current range, I_{OK} (V_O < 0 or V_O > V_{DD}) . . . . . ±10 mA
Continuous total power dissipation . . . . . See Dissipation Rating Table
Operating free-air temperature range, T_A . . . . . –40°C to 125°C
Storage temperature range, T_{stg} . . . . . –65°C to 150°C
Soldering temperature . . . . . 260°C

† Stresses beyond those listed under “absolute maximum ratings” may cause permanent damage to the device. These are stress ratings only, and functional operation of the device at these or any other conditions beyond those indicated under “recommended operating conditions” is not implied. Exposure to absolute-maximum-rated conditions for extended periods may affect device reliability.

NOTE 1: All voltage values are with respect to GND.

[illegible]	[illegible] ≤ 25°	[illegible]	[illegible] = 70°	[illegible] = 85°	[illegible] = 125°
DBV	437 mW	3.5 mW/°C	280 mW	227 mW	87 mW

[illegible]

	[illegible]	[illegible]	[illegible]
Supply voltage, V_{DD}	1.1	5.5	V
Input voltage, V_I	0	V_{DD} + 0.3	V
High-level input voltage at $\overline{\text{MR}}$ and WDI, V_{IH}	0.7 × V_{DD}		V
Low-level input voltage, V_{IL}		0.3 × V_{DD}	V
Input transition rise and fall rate at $\overline{\text{MR}}$ or WDI, Δt/ΔV		100	ns/V
Operating free-air temperature range, T_A	–40	125	°C

acteristics over recommended operating free-air temperature range (unlessotherwise noted

[illegible]				[illegible]	[illegible]	[illegible]	[illegible]
$I_{IH(AV)}$	Average high-level input current		WDI	WDI = V_{DD}, time average (dc = 88%)		120	µA
$I_{IL(AV)}$	Average low-level input current		WDI	WDI = 0.3 V, V_{DD} = 5.5 V time average (dc = 12%)		–15	µA
I_{IH}	High-level input current		WDI	WDI = V_{DD}		140 190	µA
			$\overline{MR}$	$\overline{MR}$ = V_{DD} × 0.7, V_{DD} = 5.5 V		–40 –60	µA
I_{IL}	Low-level input current		WDI	WDI = 0.3 V, V_{DD} = 5.5 V		140 190	µA
			$\overline{MR}$	$\overline{MR}$ = 0.3 V, V_{DD} = 5.5 V		–110 –160	µA
I_{OS}	Output short-circuit current (see Note 4)	$\overline{RESET}$	TPS382x-25	V_{DD} = $V_{IT, max}$ + 0.2 V, V_O = 0 V		–400	µA
			TPS382x-30				
			TPS382x-33				
			TPS382x-50			–800	µA
I_{DD}	Supply current			WDI and $\overline{MR}$ unconnected, Outputs unconnected		15 25	µA
	Internal pullup resistor at $\overline{MR}$					52	kΩ
C_i	Input capacitance at $\overline{MR}$, WDI			V_I = 0 V to 5.5 V		5	pF

NOTE 4: The $\overline{RESET}$ short-circuit current is the maximum pullup current when $\overline{RESET}$ is driven low by a µP bidirectional reset pin.

[illegible] = 1 Ω, [illegible] = 50 [illegible], A = 25°

[illegible]			[illegible]	[illegible]	[illegible]
t_w	Pulse width	at V_{DD}	V_{DD} = V_{IT-} + 0.2 V, V_{DD} = V_{IT-} - 0.2 V	6	µs
		at $\overline{MR}$	V_{DD} ≥ V_{IT-} + 0.2 V, V_{IL} = 0.3 x V_{DD}, V_{IH} = 0.7 x V_{DD}	1	µs
		at WDI	V_{DD} ≥ V_{IT-} + 0.2 V, V_{IL} = 0.3 x V_{DD}, V_{IH} = 0.7 x V_{DD}	100	ns

[illegible] = 1 Ω, [illegible] = 50 [illegible], A = 25°

[illegible]			[illegible]	[illegible]	[illegible]	[illegible]	[illegible]
t_{tout}	Watchdog time out	TPS3820	V_{DD} ≥ V_{IT-} + 0.2 V, See Timing Diagram	112	200	310	ms
		TPS3823/4/8		0.9	1.6	2.5	s
t_d	Delay time	TPS3820	V_{DD} ≥ V_{IT-} + 0.2 V, See timing diagram	15	25	37	ms
		TPS3823/4/5/8		120	200	300	ms

t_{PHL}-5 2nBT8 re436 ref74.436 refBTef415794.413 286.T3ET877 0.9071 re50 0

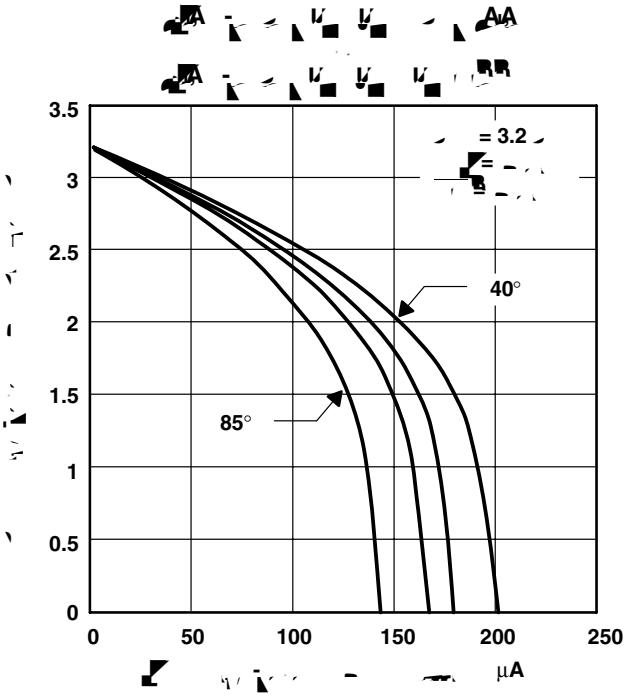
3.5
3
2.5
2
1.5
1
0.5
0
0
50
100
150
200
250
= 3.2
40°
85°
µA

6

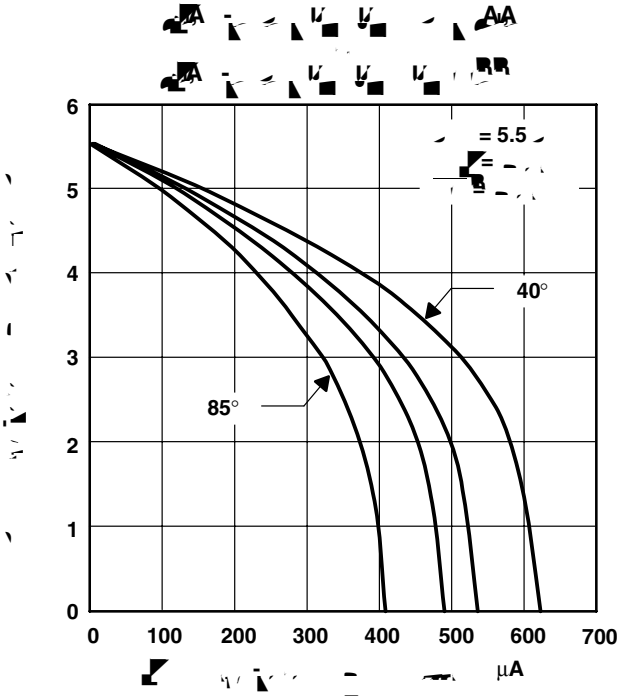
6
5
4
3
2
1
0
0
100
200
300
400
500
600
700
= 5.5
40°
85°
µA

7

8

PACKAGING INFORMATION

Orderable Device	Status (1)	Package Type	Package Drawing	Pins	Package Qty	Eco Plan (2)	Lead/Ball Finish	MSL Peak Temp (3)	Op Temp (°C)	Top-Side Markings (4)	Samples
2T25-50QFRG4Q1	ACTIVE	SOT-23	DBV	5	3000	Green (RoHS & no Sb/Br)	CU NIPDAU	Level-1-260C-UNLIM	-40 to 125	PDFQ	Samples
2T28-33QDBVRG4Q1	ACTIVE	SOT-23	DBV	5	3000	Green (RoHS & no Sb/Br)	CU NIPDAU	Level-1-260C-UNLIM	-40 to 125	PDIQ	Samples
2U3820-50QDBVRG4Q1	ACTIVE	SOT-23	DBV	5	3000	Green (RoHS & no Sb/Br)	CU NIPDAU	Level-1-260C-UNLIM	-40 to 125	PDDQ	Samples
2U3823-25QDBVRG4Q1	ACTIVE	SOT-23	DBV	5	3000	Green (RoHS & no Sb/Br)	CU NIPDAU	Level-1-260C-UNLIM	-40 to 125	PAPQ	Samples
2U3823-30QDBVRG4Q1	ACTIVE	SOT-23	DBV	5	3000	Green (RoHS & no Sb/Br)	CU NIPDAU	Level-1-260C-UNLIM	-40 to 125	PAQQ	Samples
2U3823-33QDBVRG4Q1	ACTIVE	SOT-23	DBV	5	3000	Green (RoHS & no Sb/Br)	CU NIPDAU	Level-1-260C-UNLIM	-40 to 125	PARQ	Samples
2U3823-50QDBVRG4Q1	ACTIVE	SOT-23	DBV	5	3000	Green (RoHS & no Sb/Br)	CU NIPDAU	Level-1-260C-UNLIM	-40 to 125	PASQ	Samples
2U3824-25QDBVRG4Q1	ACTIVE	SOT-23	DBV	5	3000	Green (RoHS & no Sb/Br)	CU NIPDAU	Level-1-260C-UNLIM	-40 to 125	PATQ	Samples
2U3824-33QDBVRG4Q1	ACTIVE	SOT-23	DBV	5	3000	Green (RoHS & no Sb/Br)	CU NIPDAU	Level-1-260C-UNLIM	-40 to 125	PAVQ	Samples
2U3824-50QDBVRG4Q1	ACTIVE	SOT-23	DBV	5	3000	Green (RoHS & no Sb/Br)	CU NIPDAU	Level-1-260C-UNLIM	-40 to 125	PAWQ	Samples
2U3825-33QDBVRG4Q1	ACTIVE	SOT-23	DBV	5	3000	Green (RoHS & no Sb/Br)	CU NIPDAU	Level-1-260C-UNLIM	-40 to 125	PDGQ	Samples
TPS3820-33QDBVRQ1	ACTIVE	SOT-23	DBV	5	3000	Green (RoHS & no Sb/Br)	CU NIPDAU	Level-1-260C-UNLIM	-40 to 125	PDEQ	Samples
TPS3820-50DBVRQ1G4	ACTIVE	SOT-23	DBV	5	3000	Green (RoHS & no Sb/Br)	CU NIPDAU	Level-1-260C-UNLIM	-40 to 125	PKG4	Samples
TPS3820-50QDBVRQ1	ACTIVE	SOT-23	DBV	5	3000	Green (RoHS & no Sb/Br)	CU NIPDAU	Level-1-260C-UNLIM	-40 to 125	PDDQ	Samples
TPS3823-25QDBVRQ1	ACTIVE	SOT-23	DBV	5	3000	Green (RoHS & no Sb/Br)	CU NIPDAU	Level-1-260C-UNLIM	-40 to 125	PAPQ	Samples
TPS3823-30QDBVRQ1	ACTIVE	SOT-23	DBV	5	3000	Green (RoHS & no Sb/Br)	CU NIPDAU	Level-1-260C-UNLIM	-40 to 125	PAQQ	Samples
TPS3823-33QDBVRQ1	ACTIVE	SOT-23	DBV	5	3000	Green (RoHS & no Sb/Br)	CU NIPDAU	Level-1-260C-UNLIM	-40 to 125	PARQ	Samples

Orderable Device	Status (1)	Package Type	Package Drawing	Pins	Package Qty	Eco Plan (2)	Lead/Ball Finish	MSL Peak Temp (3)	Op Temp (°C)

(4) Only one of markings shown within the brackets will appear on the physical device.

Important Information and Disclaimer: The information provided on this page represents TI's knowledge and belief as of the date that it is provided. TI bases its knowledge and belief on information provided by third parties, and makes no representation or warranty as to the accuracy of such information. Efforts are underway to better integrate information from third parties. TI has taken and continues to take reasonable steps to provide representative and accurate information but may not have conducted destructive testing or chemical analysis on incoming materials and chemicals. TI and TI suppliers consider certain information to be proprietary, and thus CAS numbers and other limited information may not be available for release.

In no event shall TI's liability arising out of such information exceed the total purchase price of the TI part(s) at issue in this document sold by TI to Customer on an annual basis.

OTHER QUALIFIED VERSIONS OF TPS3820-33-Q1, TPS3820-50-Q1, TPS3823-25-Q1, TPS3823-30-Q1, TPS3823-33-Q1, TPS3823-50-Q1, TPS3824-25-Q1, TPS3824-30-Q1, TPS3824-33-Q1, TPS3824-50-Q1, TPS3825-33-Q1, TPS3825-50-Q1, TPS3828-33-Q1, TPS3828-50-Q1 :

- Catalog: TPS3820-33, TPS3820-50, TPS3823-25, TPS3823-30, TPS3823-33, TPS3823-50, TPS3824-25, TPS3824-30, TPS3824-33, TPS3824-50, TPS3825-33, TPS3825-50, TPS3828-33, ,

TAPE AND REEL INFORMATION

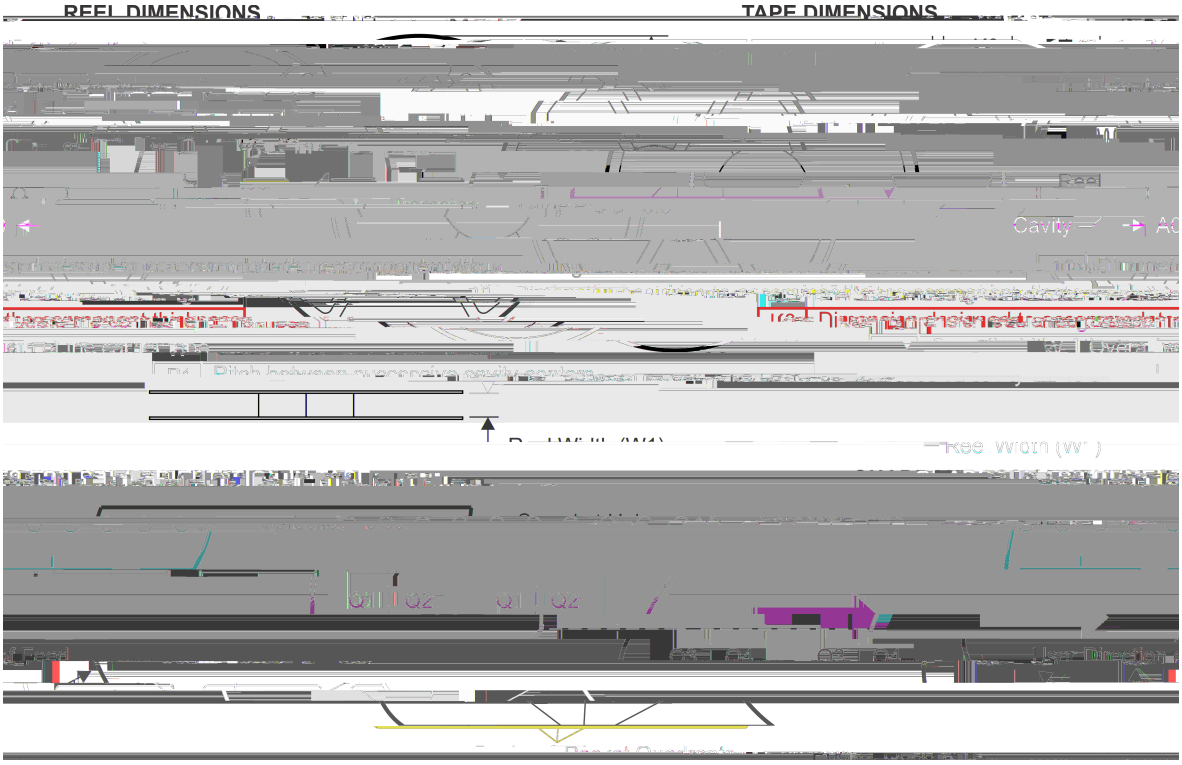

*All dimensions are nominal

Device	Package Type	Package Drawing	Pins	SPQ	Reel Diameter (mm)	Reel Width W1 (mm)	A0 (mm)	B0 (mm)	K0 (mm)	P1 (mm)	W (mm)	Pin1 Quadrant
2T25-50QFRG4Q1	SOT-23	DBV	5	3000	180.0	9.0	3.15	3.2	1.4	4.0	8.0	Q3
2T28-33QDBVRG4Q1	SOT-23	DBV	5	3000	180.0	9.0	3.15	3.2	1.4	4.0	8.0	Q3
2U3820-50QDBVRG4Q1	SOT-23	DBV	5	3000	180.0	9.0	3.15	3.2	1.4	4.0	8.0	Q3
2U3823-25QDBVRG4Q1	SOT-23	DBV	5	3000	180.0	9.0	3.15	3.2	1.4	4.0	8.0	Q3
2U3823-30QDBVRG4Q1	SOT-23	DBV	5	3000	180.0	9.0	3.15	3.2	1.4	4.0	8.0	Q3
2U3823-33QDBVRG4Q1	SOT-23	DBV	5	3000	180.0	9.0	3.15	3.2	1.4	4.0	8.0	Q3
2U3823-50QDBVRG4Q1	SOT-23	DBV	5	3000	180.0	9.0	3.15	3.2	1.4	4.0	8.0	Q3
2U3824-25QDBVRG4Q1	SOT-23	DBV	5	3000	180.0	9.0	3.15	3.2	1.4	4.0	8.0	Q3
2U3824-33QDBVRG4Q1	SOT-23	DBV	5	3000	180.0	9.0	3.15	3.2	1.4	4.0	8.0	Q3
2U3824-50QDBVRG4Q1	SOT-23	DBV	5	3000	180.0	9.0	3.15	3.2	1.4	4.0	8.0	Q3
2U3825-33QDBVRG4Q1	SOT-23	DBV	5	3000	180.0	9.0	3.15	3.2	1.4	4.0	8.0	Q3
TPS3820-33QDBVRQ1	SOT-23	DBV	5	3000	180.0	9.0	3.15	3.2	1.4	4.0	8.0	Q3
TPS3820-50DBVRQ1G4	SOT-23	DBV	5	3000	180.0	9.0	3.15	3.2	1.4	4.0	8.0	Q3
TPS3820-50QDBVRQ1	SOT-23	DBV	5	3000	180.0	9.0	3.15	3.2	1.4	4.0	8.0	Q3
TPS3823-25QDBVRQ1	SOT-23	DBV	5	3000	180.0	9.0	3.15	3.2	1.4	4.0	8.0	Q3
TPS3823-30QDBVRQ1	SOT-23	DBV	5	3000	180.0	9.0	3.15	3.2	1.4	4.0	8.0	Q3
TPS3823-33QDBVRQ1	SOT-23	DBV	5	3000	180.0	9.0	3.15	3.2	1.4	4.0	8.0	Q3
TPS3823-50QDBVRQ1	SOT-23	DBV	5	3000	180.0	9.0	3.15	3.2	1.4	4.0	8.0	Q3

Device	Package Type	Package Drawing	Pins	SPQ	Reel Diameter (mm)	Reel

Device	Package Type	Package Drawing	Pins	SPQ	Length (mm)	Width (mm)	Height (mm)
2U3824-50QDBVRG4Q1	SOT-23	DBV	5	3000	182.0	182.0	20.0
2U3825-33QDBVRG4Q1	SOT-23	DBV	5	3000	182.0	182.0	20.0
TPS3820-33QDBVRQ1	SOT-23	DBV	5	3000	182.0	182.0	20.0
TPS3820-50DBVRQ1G4	SOT-23	DBV	5	3000	182.0	182.0	20.0
TPS3820-50QDBVRQ1	SOT-23	DBV	5	3000	182.0	182.0	20.0
TPS3823-25QDBVRQ1	SOT-23	DBV	5	3000	182.0	182.0	20.0
TPS3823-30QDBVRQ1	SOT-23	DBV	5	3000	182.0	182.0	20.0
TPS3823-33QDBVRQ1	SOT-23	DBV	5	3000	182.0	182.0	20.0
TPS3823-50QDBVRQ1	SOT-23	DBV	5	3000	182.0	182.0	20.0
TPS3824-30QDBVRQ1	SOT-23	DBV	5	3000	182.0	182.0	20.0
TPS3824-33QDBVRQ1	SOT-23	DBV	5	3000	182.0	182.0	20.0
TPS3824-50QDBVRQ1	SOT-23	DBV	5	3000	182.0	182.0	20.0
TPS3825-33QDBVRQ1	SOT-23	DBV	5	3000	182.0	182.0	20.0
TPS3825-50QDBVRQ1	SOT-23	DBV	5	3000	182.0	182.0	20.0
TPS3828-33QDBVRQ1	SOT-23	DBV	5	3000	182.0	182.0	20.0
TPS3828-50QDBVRG4Q	SOT-23	DBV	5	3000	182.0	182.0	20.0
TPS3828-50QDBVRQ1	SOT-23	DBV	5	3000	182.0	182.0	20.0

LAND PATTERN DATA

PLASTIC SMALL OUTLINE

Example Board Layout

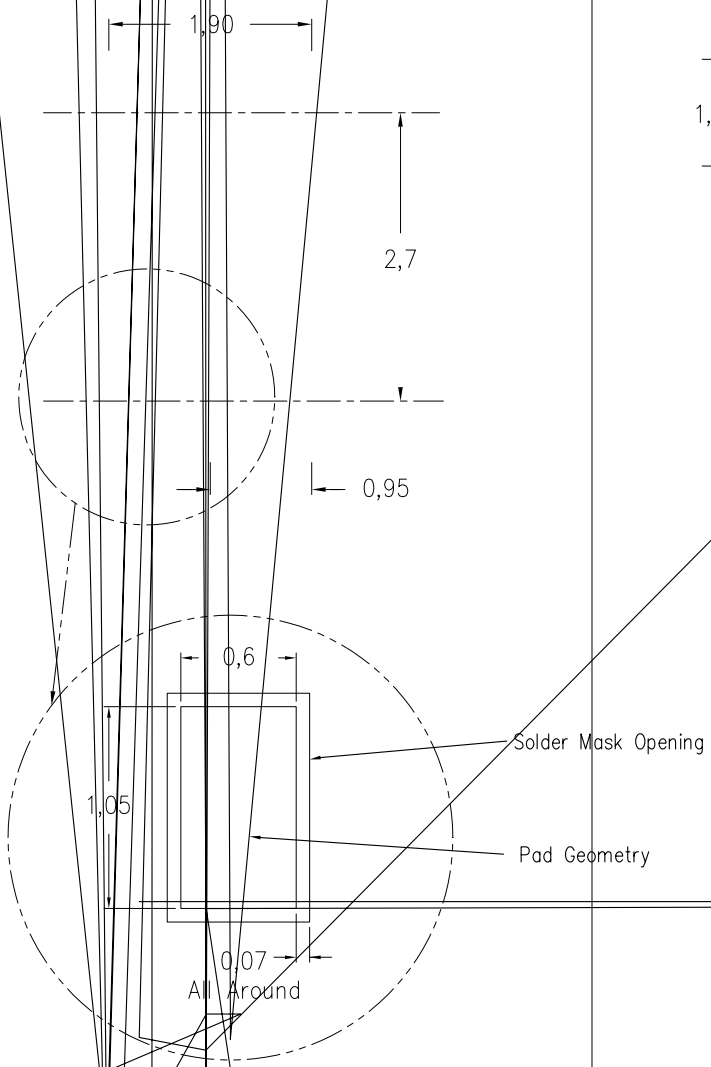

Stencil Openings
Based on a stencil thickness
of .127mm (.005inch).

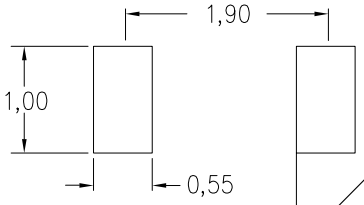

4209593-3/C 08/11

NOTES:
A. All linear dimensions are in millimeters.
B. This drawing is s[illegible] rawing not to alter the center solder mask defined pad.
D. Publication IPC-7351 is recommended for alternate designs.
E. [illegible] oidal walls and also rounding corners will offer better paste release. Customers should contact their board assembly site for stencil design recommendations. Example stencil design based on a 50% [illegible] etric metal load solder paste.